S

Server

System board D873

Technical Manual

Dieses Handbuch wurde auf Recycling-Papier gedruckt.
This manual has been printed on recycled paper.
Ce manuel est imprimé sur du papier recyclé.
Este manual ha sido impreso sobre papel reciclado.
Questo manuale è stato stampato su carta da riciclaggio.
Denna handbok är tryckt på recyclingpapper.
Dit handboek werd op recycling-papier gedrukt.

Herausgegeben von/Published by
Siemens Nixdorf Informationssysteme AG
D-33094 Paderborn
D-81730 München

Bestell-Nr./Order No.: ***A26361-D873-Z120-1-7619***
Printed in the Federal Republic of Germany
AG 0596 05/96

A26361-D873-Z120-1-7619

Is there ...

...any technical problem or other question you need clarified?...

Please contact:

- one of our IT Service Shops
- your sales partner
- your sales office

You will find the addresses of the IT Service Shops in the enclosed warranty coupon booklet.

... anything you want to tell us about this manual?

Please send us your comments quoting the order number of the manual.

Siemens Nixdorf Informationssysteme AG
Redaktion BS2000 OS ID4
Otto-Hahn-Ring 6
D-81730 München
Germany

System board D873

Technical Manual

Introduction

Important Notes

Settings in BIOS-Setup

Settings on the system board

Add-on modules on the system board

Error messages

Index

Your training needs . . .

The Siemens Nixdorf Training Centers offer you a wide range of training courses in information technology and on IT products and other subjects - onsite near to your workplace or offsite at one of our training centers.

Contact us for information on consulting, course schedules and selfstudy material
Please fax:
Fax: ++49 89 636-42945

Or write to:

Siemens Nixdorf Informationssysteme AG
Training Center, Beratungsservice
D-81730 München
Germany

Intel and Pentium are registered trademarks and OverDrive is a trademark of Intel Corporation, USA.

Microsoft, MS, MS-DOS, Windows and Windows 95 are registered trademarks of Microsoft Corporation.

PS/2 and OS/2 Warp are registered trademarks of International Business Machines, Inc.

All other trademarks referenced are the trademarks or registered trademarks of their respective owners, whose protected rights are acknowledged.

Copyright © Siemens Nixdorf Informationssysteme AG 1996.
All rights, including rights of translation, reproduction by printing, copying or similar methods, even of parts are reserved.
Offenders will be liable for damages.
All rights, including rights created by patent grant or registration of a utility model or design, are reserved.
Delivery subject to availability; right of technical modifications reserved.

May 1996 edition

Contents

Introduction 1
Notational conventions 1
Features 2
Ports and connectors 3
Possible screen resolutions 4
Interrupt table 5

Important Notes 7

Settings in BIOS Setup 9
System settings - Main menu 10
- Time and Date - System Time / System Date 10
- Floppy disk drive - Diskette A / Diskette B 11
- Hard disk drives - Hard Disk 1 and Hard Disk 2 11
- System startup - Boot Options 14
- Type of monitor - Video Display 15
- Base Memory 15
- Extended Memory 15

Making advanced system settings - Advanced menu 16
- Cache Memory 17
- ROM areas in the RAM - Shadow Memory 19
- Ports and controller - Peripheral Configuration 20
- PCI Configuration 23
- Additional system settings - Advanced System Configuration 25
- Plug&Play functionality - Plug & Play O/S 26
- Reset Configuration Data 27
- Hard disk access - Large Disk Access Mode 27

Setting up the security features - Security Menu 28
- Setup Password / System Password 28
- Set Setup Password 29
- Setup Password Lock 29
- System Password - Set System Password 29
- System Password Mode 30
- System Load 30
- Setup Prompt 30
- Write protection for floppy disk drive - Diskette Write 31
- Write protection for System BIOS - Flash Write 31
- Soft Power Off 31
- Remote Power On 31

Set Server Management - Server Menu 32

- Server Management 32
- O/S Boot Timeout 33
- ASR&R Boot Delay 33
- Boot Retry Counter 34
- Start Diagnostic System 34
- Hardware Watchdog 34
- CPU 0 Status / CPU 1 Status 35
- Pager Configuration 35
- VT100 Configuration 38

Exiting BIOS Setup - Exit menu 40
- Save Changes & Exit 40
- Discard Changes & Exit 40
- Get Default Values 40
- Load Previous Values 40
- Save Changes 40

Settings on the system board 41
Setting processor type - Jumper X400 42
System BIOS recovery - Switch 1 42
Write protection for system BIOS - Switch 5 43
Write protection for floppy disk drive - Switch 6 43
Switch 3, 4, 7 and 8 43

Add-on modules on the system board 45
Upgrading main memory 46
Replacing the processor 47
Upgrading the Second-level cache 49
Replacing the lithium battery 50

Error messages 51

Messages d'erreur 54

Mensajes de error 57

Messagi di errore 60

Felmeddelanden 63

Foutmeldingen 66

Index 69

Introduction

This Technical Manual applies for the system board D873.

Notational conventions

The meanings of the symbols and fonts used in this manual are as follows:

This indicates instructions which it is essential to observe. Failure to do so may endanger your health, the operational integrity and electrical safety of your PC, or the security of your data.

This symbol is followed by supplementary information, remarks and tips.

▶ Texts which follow this symbol describe activities that must be performed.

␣ This symbol means that you must enter a blank space at this point.

This symbol means that you must press the Enter key.

`Texts in this typeface` are screen outputs from the PC.

`Texts in this bold typeface` are the entries you make via the keyboard.

Texts in italics indicate commands or menu item.

"Quotation marks" indicate highlighted text and names of chapters."

Features

- Dual processor system (second processor optional)
- Processor: Pentium, 75 to 166 MHz with 16 Kbytes internal cache (First-Level cache)
- Prepared for Pentium OverDrive processor (OverDrive-Ready)
- Neptun EISA PCI chipset
- 72-bit data bus (64-bit data and 8-bit parity)
- 512 Kbytes synchronous Second-Level cache (parity-checked)
- Memory configuration on system board: 8 Mbytes to 512 Mbytes (4 banks)
- 512 Kbytes Flash BIOS
- 4 PCI slots (1 slot shared)
- 4 EISA slots, bus master-capable (1 slot shared)
- Monitor controller connected to PCI bus; graphics processor TSENG ET4000/W32P, 1 Mbyte DRAM video memory
- ASIC for Server Management
- IDE hard disk controller connected to PCI bus for up to two IDE drives (e.g. IDE hard disk drive, ATAPI CD ROM drive))
- Real-time clock/calendar with integrated battery backup
- Floppy disk controller (up to 2.88 Mbytes format)
- Connector for loudspeaker, two fans, remote-On/Off, Floppy disk drive, IDE disk drive, control panel and service
- Monitor port
- Parallel port (ECP- and EPP-compatible)
- Two serial ports (compatible 16550, 16-Byte-FIFO)
- PS/2 mouse port
- PS/2 keyboard port
- CAN bus port for control of external drive cabinets (CAN = Controller Area Network)
- Security functions in BIOS

Ports and connectors

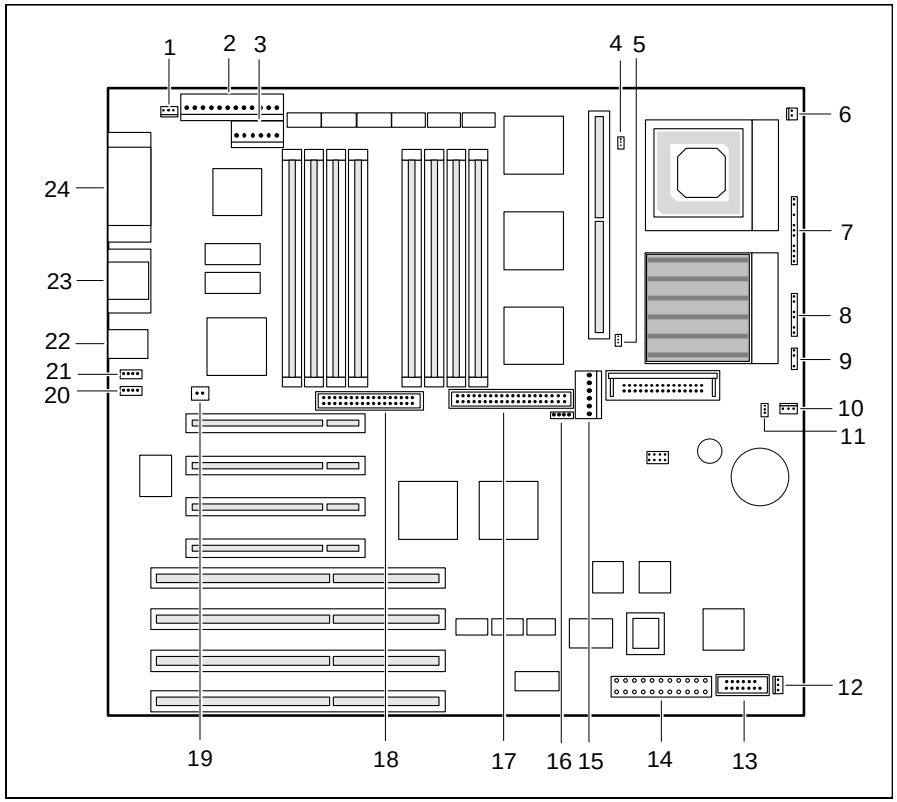

1 = Connector for soft-off power supply
2 = Power supply 5V and ± 12V
3 = Power supply 5V
4 = Temperate sensor for processor 2
5 = Temperature sensor for processor 1
6 = ON/OFF switch
7 = Control panel 1
8 = Control panel 2
9 = Loudspeaker
10 = Fan 1
11 = Temperature sensor for air intake
12 = Fan 2
13 = Signaling/auxiliary voltage for Primergy 500 series
14 = Power supply for Primergy 500 series +5 V, 3,3 V and ±12V
15 = Connector for power supply 3,3 V
16 = SCSI LED
17 = IDE drives
18 = Floppy disk drives
19 = Remote on
20 = CAN bus controller 2
21 = CAN bus controller 1
22 = Keyboard and mouse
23 = Serial ports 1 and 2
24 = Parallel port and monitor port

Possible screen resolutions

The screen resolutions in the following table refer to the monitor controller on the system board.

If you are using an external monitor controller, you will find details of supported screen resolutions in the Operating Manual or Technical Manual supplied with the controller.

Screen resolution	Refresh rate (Hz)	Horizontal-rate (kHz)	Max. number of colors
640x350	70	31,3	16
640x350	84	38	16
640x480	60	31,3	16777216
640x480	75	38	16777216
640x480	90	48	65536
720x400	70	31,5	16
720x400	84	38	16
800x600	56	35	65536
800x600	60	38	65536
800x600	75	47	65536
800x600	90	60	256
1024x768	87 interlaced	36	256
1024x768	60	49	256
1024x768	70	57	256
1024x768	75	60	256
1280x1024	87 interlaced	49	16

Interrupt table

	Assigned IRQ
System clock	IRQ0
Keyboard	IRQ1
not available	IRQ2
Serial port COM2	IRQ3
Serial port COM1	IRQ4
free	IRQ5
Floppy disk drive controller	IRQ6
Parallel port LPT1	IRQ7
Real-time clock (RTC)	IRQ8
monitor controller/free	IRQ9
free	IRQ10
free	IRQ11
Mouse controller	IRQ12
Numeric processor	IRQ13
IDE controller	IRQ14
free	IRQ15

„Assigned IRQ“ = interrupts assigned as shipped

i

Note that an interrupt cannot be used by two ISA boards or onboard controllers at the same time.

The monitor controller of the system board does not require interrupt IRQ9. If you are using a different controller, it may need interrupt IRQ9.

Important Notes

Be sure to read this page carefully and note the information before you open the PC.

Please note the information provided in the chapter "Safety" in the Operating Manual of the PC.

Incorrect replacement of the lithium battery may lead to a risk of explosion. It is therefore essential to observe the instructions in the section „Add-on modules“ - „Replacing the lithium battery“.
The lithium battery must be replaced with an identical battery or a battery type recommended by the manufacturer (CR2032).

Do not throw lithium batteries into the trashcan. Your vendor or dealer or their authorized representatives will take used batteries back free of charge so that they can be recycled or disposed of in the proper manner.

ADVARSEL

Lithiumbatteri - Eksplosionsfare ved fejlagtig håndtering. Udskiftning må kun ske med batteri af samme fabrikat og type. Lever det brugte batteri tilbage til leverandøren.

ADVARSEL

Eksplosjonsfare ved feilaktig skifte av batteri. Benytt samme batteritype eller en tilsvarende type anbefalt av apparatfabrikanten. Brukte batterier kasseres i henhold til fabrikantens instruksjoner.

VARNING

Eksplosionsfara vid felaktigt batteribyte. Använd samma batterityp eller en ekvivalent typ som rekommenderas av apparattillverkarenfabrikanten. Kassera använt batteri enligt fabrikantens instruktion.

VAROITUS

Paristo voi räjähtää, jos se on virheellisesti asennettu. Vaihda paristo ainoastaan laitevalmistajan suosittelemaan tyyppiin. Hävitä käytetty paristo valmistajan ohjeiden mukaisesti.

Connecting cables for peripherals must be adequately insulated to avoid interference.

Modules with electrostatic sensitive devices (ESD) may be identified by labels.

When you handle modules fitted with ESDs, you must observe the following points under all circumstances:

- You must always discharge yourself (e.g. by touching a grounded object) before working.
- The equipment and tools you use must be free of static charges.
- Pull out the power plug before inserting or pulling out modules containing ESDs.
- Always hold modules with ESDs by their edges.
- Never touch pins or conductors on modules fitted with ESDs.

Settings in BIOS Setup

The *BIOS Setup* menu allows you to set your hardware configuration and system functions. In addition, the *BIOS Setup* displays technical information on the PC's configuration.

When it is supplied, the PC is set to factory default settings which you can alter in the *BIOS Setup* menus. Any changes you make take effect as soon as you save the settings and quit the *BIOS Setup*.

The Operating Manual describes how to call the *BIOS Setup* and change menu entries.

You can select the following settings in the *BIOS Setup*:
Main - system functions
Advanced - advanced system configuration
Security - security features
Power - power-management features
Exit - save and quit

i The various menus are described below with all setting options. Since the setting options depend on your PC's hardware configuration, some of them may not be offered in the *BIOS setup*.

System settings - Main menu

In the *Main menu* you can set up the following:
- Time (in the field marked *System Time*)
- Date (in the field marked *System Date*)
- Floppy disk drive (in the field marked *Diskette A* or *Diskette B*)
- Hard disk drive (in the submenus of *Hard Disk*)
- System boot (in the submenus of *Boot Options*)
- Display device (in the field marked *Video Display*)

```
   Phoenix BIOS Setup Copyright 1985-95 Phoenix Technologies Ltd.
 Main    Advanced    Security    Server    Exit

  System Time:          [07:42:19]          Item Specific Help
  System Date:          [08/11/1995]

  Diskette A:           [1.4M]
  Diskette B:           [None]

▶ Hard Disk 1:          None
▶ Hard Disk 2:          None

▶ Boot Options

  Video Display:        [EGA/VGA]

  Base Memory:             640K
  Extended Memory:          63M

F1  Help    ↑↓  Select Item    -/+   Change Values      F9 Setup Defaults
ESC Exit    ←→ Select Menu    Enter Select ▶ Sub-Menu  F7 Previous Values
```

Example for the *Main* menu

Time and Date - System Time / System Date

The *System Time* field and the *System Date* field show the time and date respectively according to the PC. The time is shown in the format *hh:mm:ss* (hours:minutes:seconds) and the date is shown in the format *mm/dd/yyyy* (month/day/year). You can move the cursor between the *System Time* and *System Date* fields (e.g. from hours to minutes) using the tabulator key.

If the settings in the *System Time* and *System Date* fields are frequently wrong when you power up the computer, the lithium battery is dead. Change the battery as described in „Add-on modules“ - „Replacing the lithium battery“).

Floppy disk drive - Diskette A / Diskette B

These two fields are used to specify the type of floppy disk drive installed.

360K, 720K, 1.2M, 1.4M, 2.8M
The entry depends on the floppy disk drive installed.
(Default entry Diskette A : *1.4M*).

None A floppy disk drive is not installed.
(Default entry for Diskette B:).

Hard disk drives - Hard Disk 1 and Hard Disk 2

call the submenu to make corresponding settings of the IDE hard disk drive.

i You should change the default settings only if you are connecting an additional IDE drive.

The following description of the setting options for *Hard Disk 1* also applies to *Hard Disk 2*. The default settings depend on the installed drive.

```
Phoenix BIOS Setup Copyright 1985-95 Phoenix Technologies Ltd.
  Main
```

Hard Disk 1: 850 Mbyte	Item Specific Help
Autotype Hard Disk: [Press Enter]	
Type: [User]	
Cylinders: [1647]	
Heads: [16]	
Sectors/Track: [63]	
Write Precomp: [None]	
Transfer Mode: [Standard]	
LBA Translation: [Disabled]	

```
F1  Help    ↑↓  Select Item    -/+   Change Values      F9 Setup Defaults
ESC Exit    ←→ Select Menu     Enter Select ▶ Sub-Menu  F7 Previous Values
```

Example for the submenu *Hard Disk 1*

! Only if you have installed a new unrecorded IDE hard disk drive, you should mark the *Autotype Hard Disk* field.

If you have set the hard disk parameters with *Autotype Hard Disk*, you can only reduce the values.

If you have installed a new unrecorded IDE hard disk drive, you should mark the *Autotype Hard Disk* field and press Enter. This has the effect of setting the optimum values for the IDE hard disk drive. You can change these values if you set the *Type* field to *User*.

Type - Hard Disk Type

This field is used to specify the type of hard disk drive.

None You cannot change the hard disk parameters (*Cylinders*, *Heads*, *Sector/Track* and *Write Precomp*). An IDE drive has not been installed.

1 to *39* The hard disk parameters (*Cylinders*, *Heads* etc.) are preset.

Auto If the hard disk supports this mode, the setup menu reads the hard disk parameters from the disk itself and sets them automatically. You do not need to select the parameters yourself.

User You can enter the hard disk parameters (*Cylinders*, *Heads* etc.) yourself.
If you have set the hard disk parameters with *Autotype Hard Disk*, you can only reduce the values.

Examples of user-defined entries (IDE drives):

hard disk parameter	hard disk capacity		
	850 Mbyte	1 Gbyte	1,6 Gbyte
Cylinders	1647	2097	3148
Heads	16	16	16
Sectors	63	63	63
Write Precomp	None	None	None

Cylinders, Heads, Sectors/Track, Write Precomp - hard disk parameter

These hard disk parameters are set in accordance with the IDE hard disk drive. If you want to change the hard disk parameters manually, set the *Type* field to *User*.

Transfer Mode

This field specifies the transfer mode for the IDE hard disk drive.

Standard One block is transferred for each interrupt (default entry).

2 Sectors, *4 Sectors*, *6 Sectors*, *8 Sectors*, *16 Sectors*
The set number of blocks (sectors) is transferred for each interrupt.

LBA Translation - Addressing

This field enables and disables the LBA (Logical Block Addressing) mode. LBA mode allows you to install and use hard disks with a capacity of more than 528 Mbytes. If a hard disk supports LBA mode, you can use the full capacity of the IDE hard disk.

The default entry depends on the installed IDE hard disk drive. Change the default entries only if you are installing another hard disk drive.

You may only use IDE drives in the LBA mode selected when they were set up. In other words, if you set up a hard disk with LBA mode *disabled*, you may only operate the hard disk with LBA mode *disabled*.

Enabled If the hard disk supports LBA and it has a capacity of more than 528 Mbytes, the BIOS translates the hard disk parameters, allowing the disk's full capacity to be used.
If the hard disk does not support LBA, its parameters are not translated.

Disabled The BIOS uses the hard disk parameters and supports a maximum capacity of 528 Mbytes.

System startup - Boot Options

calls the submenu in which you can select the settings for system startup.

```
     Phoenix BIOS Setup Copyright 1985-95 Phoenix Technologies Ltd.
 Main

        Boot Options                                  Item Specific Help

  POST Error Halt:   [No Halt On Any Errors]
  Quick Boot:        [Disabled]

F1  Help    ↑↓  Select Item    -/+   Change Values      F9 Setup Defaults
ESC Exit    ←→  Select Menu    Enter Select ► Sub-Menu  F7 Previous Values
```

Example for submenu *Boot Options*

POST Error Halt - Aborting system startup

defines whether the system startup is to be aborted and the system halted when an error is detected.

Halt On All Errors
If the self-test detects an error, system startup is aborted after the self-test, and the system is halted.

No Halt On Any Errors
The system startup is not aborted. The error is ignored as far as possible (default entry).

Quick Boot

can reduce the extent of the self-test and thus accelerate the system startup.

Enabled When the PC is switched on, the quick self-test is carried out, in which the floppy disk drives are not checked.

Disabled When the PC is switched on, the complete PC configuration is tested (default entry).

Type of monitor - Video Display

This field is used to specify the type of monitor connected.

EGA/VGA, Color 80, Monochrome
Default entry: *EGA/VGA*

Base Memory

This field indicates the size of the available base memory below 1 Mbyte.

Extended Memory

This field indicates the size of the memory above 1 Mbyte.

Making advanced system settings - Advanced menu

Change the default settings only for special applications. Incorrect settings can cause malfunctions.

You can make the following system settings in the *Advanced* menu:

- Internal cache and second-level cache (in the *Cache Memory* submenu)
- Copy BIOS sections to the RAM (in the *Shadow Memory* submenu)
- Ports and controllers (in the *Peripheral Configuration* submenu)
- PCI functionality (in the *PCI Configuration* submenu)
- Additional system settings (in the *Advanced System Configuration* submenu)
- Plug&Play functionality (in the *Plug and Play O/S* field)
- Configuration data (in the *Reset Configuration Data* field)
- Hard disk access (in the *Large Disk Access Mode* field)

```
      Phoenix BIOS Setup Copyright 1985-95 Phoenix Technologies Ltd.
  Main    Advanced    Security    Server    Exit

                    Warning!                        Item Specific Help
  Setting items on this menu to incorrect           ──────────────────
values
  may cause your system to malfunction.

▶ Cache Memory
▶ Shadow Memory
▶ Peripheral Configuration
▶ PCI Configuration
▶ Advanced System Configuration
  Plug & Play O/S:              [No]
  Reset Configuration Data:     [No]

  Large Disk Access Mode:      [DOS]

F1  Help    ↑↓  Select Item    -/+   Change Values      F9 Setup Defaults
ESC Exit    ←→ Select Menu    Enter Select ▶ Sub-Menu  F7 Previous Values
```

Example for the *Advanced* menu

Cache Memory

calls the submenu in which you can make the settings for the internal cache (in the processor) and the second-level cache (on the system board).

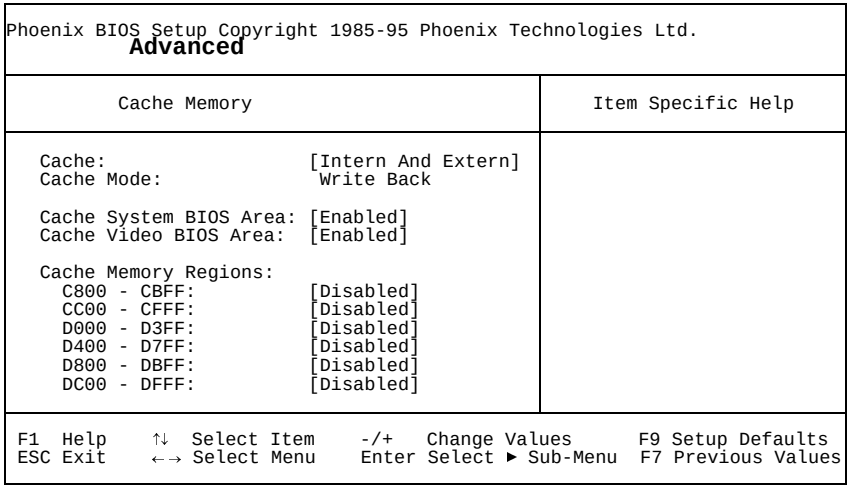

Example for submenu *Cache Memory*

Cache - cache utilization

This field switches the cache on and off. The cache is a buffer to which parts of the main memory and BIOS can be temporarily copied. The PC's performance is higher when the cache is switched on.

You must disable the cache if:

- the access time is too short for older applications
- you are installing *OS/2 Warp*.

Intern Only Only the internal cache is used.

Intern And Extern
Internal (first-level cache) and external cache (second-level cache) are enabled. If there is no external cache, only the internal cache is used (Default entry).

Disabled Internal (first-level cache) and external cache (second-level cache) are disabled. All cache-related settings are then without effect.

Cache Mode

Condition: The *Cache* field must be set to *Intern Only* or *Intern And Extern*.

Cache Mode sets the mode in which the CPU uses the cache. The field is set to *Write Back* and can not be changed.

In write-back mode the CPU writes information to the cache and the information is only written to main memory if necessary. Memory and cache contents are not identical.

Cache System BIOS Area / Cache Video BIOS Area

Condition: The *Cache* field must be set to *Intern Only* or *Intern And Extern*.

Cache System BIOS Area and *Cache Video BIOS Area* lets you specify the BIOS that should be mapped to the cache. Mapping the BIOS to the cache increases system performance.

Enabled The specified BIOS is mapped to the cache (default entry).

Disabled The specified BIOS is not mapped to the cache.

Cache Memory Regions

Condition: The *Cache* field must be set to *Intern Only* or *Intern And Extern*.

Cache Memory Regions lets you specify the BIOS ROM areas that should be mapped to the cache. Mapping the BIOS ROM areas to the cache increases system performance.

Enabled The relevant ROM area is mapped to the cache.

Disabled The relevant ROM area is not mapped to the cache (default entry).

ROM areas in the RAM - Shadow Memory

calls the submenu in which you can specify which parts of the ROM (Read Only Memory) are to be copied to the faster RAM (Random Access Memory) at system startup.

```
Phoenix BIOS Setup Copyright 1985-95 Phoenix Technologies Ltd.
        Advanced
------------------------------------------------------------------------
        Shadow Memory                          Item Specific Help
------------------------------------------------------------------------
  System Shadow:            Enabled
  Video Shadow:            [Enabled]

  Shadow Memory Regions:
    C800 - CBFF:           [Disabled]
    CC00 - CFFF:           [Disabled]
    D000 - D3FF:           [Disabled]
    D400 - D7FF:           [Disabled]
    D800 - DBFF:           [Disabled]
    DC00 - DFFF:           [Disabled]
------------------------------------------------------------------------
F1  Help    ↑↓  Select Item    -/+   Change Values      F9 Setup Defaults
ESC Exit    ←→  Select Menu    Enter Select ► Sub-Menu  F7 Previous Values
```

Example for submenu *Shadow Memory*

System Shadow

This field is always *Enabled*, because the System BIOS is automatically copied to the faster RAM.

Video Shadow

This field allows you to copy the video BIOS to fast RAM. Copying the video BIOS to fast RAM increases system performance.

Enabled The video BIOS is copied to fast RAM (default entry).

Disabled The video BIOS is not copied to fast RAM. This setting is not effective unless an external monitor controller is used.

Shadow Memory Regions - ROM areas

Shadow Memory Regions allows you to copy ROM areas to fast RAM. Copying ROM areas to fast RAM increases system performance.

Enabled The ROM area is copied to fast RAM.

Disabled The ROM area is not copied to fast RAM (default entry).

Ports and controller - Peripheral Configuration

Use the EISA configuration program (ECU) to make settings at the ports and controllers.

Peripheral Configuration calls the submenu in which you can set the ports and controllers.

```
      Phoenix BIOS Setup Copyright 1985-95 Phoenix Technologies Ltd.
          Advanced
------------------------------------------------------------------------
        Peripheral Configuration                Item Specific Help
------------------------------------------------------------------------
 Serial 1:                [Auto]
 Serial 2:                [Auto]
 Parallel:                [Auto]
 Parallel Mode:           [Printer]

 Diskette Controller:     [Enabled]
 Hard Disk Controller:    [Enabled]

 Mouse Controller:        [Enabled]
------------------------------------------------------------------------
F1  Help    ↑↓  Select Item    -/+   Change Values      F9 Setup Defaults
ESC Exit    ←→  Select Menu    Enter Select ► Sub-Menu  F7 Previous Values
```

Example for submenu *Peripheral Configuration*

Serial 1 / Serial 2 - Serial ports

This field selects the address and the interrupt used to access the corresponding serial port.

3F8h, IRQ4, *2F8h, IRQ3*, *3E8h, IRQ4*, *2E8h, IRQ3*,
The serial port is set to the shown address and interrupt.

Auto The serial port is automatically set to the next available combination (address, interrupt) (Default entry).

Disabled The serial port is disabled. The corresponding interrupt and address are free.

Parallel - parallel port

This field selects the address and the interrupt used to access the parallel port.

378h, IRQ7, *278h, IRQ5*, *3BCh, IRQ7*
The parallel port is set to the shown address and interrupt.

Auto The parallel port is automatically set to the next available combination (address, interrupt) (default entry).

Disabled The parallel port is disabled.

Parallel Mode

This field is used to specify whether the parallel port is to be used as a bi-directional input/output port or just as an output port. *ECP* and *EPP* transfer modes allow faster transfer rates of 2 and 2.4 Mbytes/s. These modes will only work with peripheral devices which support them. The field *Parallel* must be set to *378h* or *278h*

Printer The port functions as an output port only (default entry)

Bidirection Data can be transferred in both directions across the port.

EPP Fast transfer mode (up to 2 Mbytes/s), can output and receive data. Requires a peripheral device which supports the EPP (Enhanced Parallel Port) transfer mode.

ECP Fast transfer mode (up to 2.4 Mbytes/s), can output and receive data. Requires a peripheral device which supports the ECP (Enhanced Capability Port) transfer mode.

Diskette Controller

This field is used to enable and disable the built-in floppy disk controller on the system board.

Enabled The floppy disk controller is enabled - IRQ 6 is used. (default entry).

Disabled The floppy disk controller is disabled - IRQ 6 is free.

Hard Disk Controller

This field allows you to enable and disable the built-in IDE hard disk controller. The associated interrupt (IRQ 14) will only be available if no hard disk is physically connected.

Enabled The IDE hard disk controller is enabled (default entry).

Disabled The IDE hard disk controller is disabled.

Mouse Controller

This field is used to enable and disable the built-in mouse controller on the system board.

Enabled The mouse controller is enabled - IRQ 12 is used (default entry).

Disabled The mouse controller is disabled - IRQ 12 is free.

PCI Configuration

Use the EISA configuration program (ECU) to make settings at the VGA/PCI interrupts.

PCI Configuration calls the submenu in which you can make the settings for the PCI slots. The submenu has a scroll bar so that you can also show the settings for the PCI slots 3 and 4.

```
      Phoenix BIOS Setup Copyright 1985-95 Phoenix Technologies Ltd.
          Advanced

         PCI Configuration                          Item Specific Help

 PCI Interrupt Mapping INTA#: [Auto]
 PCI Interrupt Mapping INTB#: [Auto]
 PCI Interrupt Mapping INTC#: [Auto]
 PCI Interrupt Mapping INTD#: [Auto]

 VGA Interrupt:               [Disabled]

 PCI Device, Slot #1
    Default Latency Timer:    [Yes]
    Latency Timer:            [0040]

 PCI Device, Slot #2
    Default Latency Timer:    [Yes]
    Latency Timer:            [0040]

F1  Help    ↑↓  Select Item    -/+   Change Values      F9 Setup Defaults
ESC Exit    ←→  Select Menu    Enter Select ► Sub-Menu  F7 Previous Values
```

Example for submenu *PCI Configuration*

PCI Interrupt Mapping INTx# - Assignment of the PCI interrupts

defines which PCI interrupt is switched to which ISA interrupt. For a change to take effect, you must switch your system off and then on again when the *Setup-BIOS* has terminated.

With multifunctional PCI boards, all PCI interrupts can be used. The controllers on the system board do not need any PCI interrupts.

If you use a setting other than *Auto*, the Plug&Play functionality of the system BIOS for PCI boards is deactivated.

The PCI interrupts INTA#, INTB#, INTC# and INTD# are assigned as follows for PCI boards that require only a single PCI interrupt:
PCI slot 1 = INTA#, PCI slot 2 = INTB#,
PCI slot 3 = INTC#, PCI slot 4 = INTD#,

Auto The PCI interrupts are assigned automatically in accordance with the Plug&Play guidelines (default entry).

Disabled No ISA interrupt is assigned to the PCI interrupt.

IRQ03, IRQ04, IRQ05, IRQ06, IRQ07, IRQ09, IRQ10, IRQ11, IRQ12, IRQ14, IRQ15
The PCI interrupt is switched to the selected ISA interrupt. You may not select an ISA interrupt that is used by a component on the system board (e.g. controller) or an ISA board.

VGA Interrupt - Assigning PCI-VGA interrupt

assigns an interrupt to the monitor controller. The monitor controller on the system board does not require an interrupt and can be operated in *Disabled* mode. If you have not assigned a different interrupt using *PCI Interrupt Mapping*, then IRQ9 is assigned.

Enabled The interrupt is assigned to the monitor controller.

Disabled No interrupt is assigned to the monitor controller (default entry).

PCI Device, Slot #n: Default Latency Timer

specifies the lowest number of clock cycles in which a PCI master module can be active at the PCI bus. *n* stands for the number of the PCI slot. For the change to take effect, you must switch your PC off and then on again after the *Setup-BIOS* has terminated.

Yes The value predefined by the PCI module is accepted. The entry in the corresponding field for *PCI Device, Slot #n: Latency Timer* is ignored. (Default entry)

No The value predefined by the PCI module is ignored. The value set in the corresponding field for *PCI Device, Slot #n: Latency Timer* determines the number of clock cycles.

PCI Device, Slot #n: Latency Timer

Condition: the corresponding field for *PCI Device, Slot #n: Default Latency Timer* must be set to *No*.

The field defines the lowest number of clock cycles in which a burst can be transferred on the PCI bus. *n* stands for the number of the PCI slot.

0000h to *0280h* Number of clock cycles (default entry = *0040h*).

Additional system settings - Advanced System Configuration

calls the submenu in which you can make additional system settings.

```
Phoenix BIOS Setup Copyright 1985-95 Phoenix Technologies Ltd.
          Advanced
------------------------------------------------------------------------
          Advanced System Configuration          |   Item Specific Help
------------------------------------------------------------------------
  APIC:                  [Enabled]                |
  Video Subsystem:       [Auto]                   |
------------------------------------------------------------------------
 F1  Help    ↑↓  Select Item    -/+   Change Values      F9 Setup Defaults
 ESC Exit    ←→  Select Menu    Enter Select ► Sub-Menu  F7 Previous Values
```

Example for the submenu *Advanced System Configuration*

APIC - Multiprocessor Interrupt Controller

defines the functionality of the APIC (Advanced Interrupt Controller) in the processor.

Enabled The second processor (if present) can be used by multiprocessor operating systems to enhance performance (default entry).

Disabled The second processor cannot be used by the operating system.

An operating system must always be operated with the settings as installed.
Novell NetWare can be operated only with the setting *Disabled*.

Video Subsystem - Monitor controller

defines settings for the monitor controller. If you are using your own monitor controller and are encountering problems, this setting may be the cause.

Auto default entry

3C3h, 46E8h further possible settings

Have settings changed only by a service technician or have the service technician instruct you in how to make changes.

Plug&Play functionality - Plug & Play O/S

defines the Plug&Play functionality. Plug&Play means that inserted modules are automatically recognized and installed if they support Plug&Play.

Yes The operating system (e.g. Windows 95) is responsible for some of the Plug&Play functions. Select this setting only if the operating system supports Plug&Play.

No The system BIOS is responsible for the complete Plug&Play functionality (default entry).

Reset Configuration Data

specifies whether or not the configuration data are reset and reinitialized when the system is booted.

Yes After the system is booted, the old configuration data are reset and the entry in this field is set to *No*. The current configuration data are ascertained by means of the Plug&Play functionality. The installed boards and drives are initialized with these data. Non-Plug&Play components must be entered manually.

No After the system is started, the Plug&Play functionality ascertains the current configuration data and uses this data to initialize the installed boards and drives. The configuration data of non-Plug&Play components are not reset (default entry).

Hard disk access - Large Disk Access Mode

specifies the type of hard disk access for large hard disks (more than 1024 cylinders, 16 heads).

DOS the operating system uses MS-DOS-compatible hard disk accesses (default entry).

Other If the operating system uses hard disk accesses which are not MS-DOS-compatible (e.g. Novell, SCO Unix).

Setting up the security features - Security Menu

You can set up the following security features in the *Security* menu:

- Protecting BIOS Setup (in the field marked *Set Setup Password*)
- Protecting BIOS of add-on modules (in the field marked Setup Password Lock
- Protecting system boots (in the field marked *Set System Password*)
- Locking input devices (in the field marked *System Password Mode*)
- Prevention of system boots from floppy disk (in the field marked *System Load*)
- Prevention of write operations to floppy disk (in the field marked *Diskette Write*)
- Write protection for BIOS Setup Flash chip (in the field marked *Flash Write*)
- Switching off by software (in the field marked *Soft Power Off*)
- Remote Power On (in the field marked *Remote Power On*)

```
Phoenix BIOS Setup Copyright 1985-95 Phoenix Technologies Ltd.
   Main    Advanced    Security    Server    Exit

   Setup Password           Not Installed          Item Specific Help
   System Password          Not Installed          ──────────────────

   Set Setup Password:      [Press Enter]
   Setup Password Lock:     [Standard]
   Set System Password:     [Press Enter]
   System Password Mode:    [System]

   System Load:             [Standard]
   Setup Prompt:            [Enabled]

   Diskette Write:          [Enabled]
   Flash Write:             [Enabled]

   Soft Power Off:          [Enabled]
   Remote Power On:         [Enabled]

F1  Help    ↑↓  Select Item    -/+   Change Values      F9 Setup Defaults
ESC Exit    ←→ Select Menu    Enter Select ▶ Sub-Menu  F7 Previous Values
```

Example for the *Security* menu

Setup Password / System Password

These fields indicate whether the appropriate password is installed or not.

Set Setup Password

This field enables you to install the setup password. The setup password prevents unauthorized callup of the *BIOS setup*.
Mark the field and press the Return key. You can then enter and confirm the setup password (see also the PC Operating Manual).

Setup Password Lock

specifies the effect of the Setup Password. The setting in this field takes effect as soon as a Setup Password has been installed.

Standard Setup Password prevents unauthorized calls of the *BIOS Setup*. (Default entry).

Extended The Setup Password prevents unauthorized calls of the *BIOS Setup* and locks the keyboard when the PC is initialized. This prevents unauthorized access to settings for installed boards with a BIOS of their own.
Access to the BIOS of the board is only possible if the Setup Password is entered during board initialization. No prompt to enter the password appears on screen.

System Password - Set System Password

Condition: the setup password must be installed.

This field enables you to install the system password. The system password prevents unauthorized callup of the system.
Mark the field and press the Return key. You can then enter and confirm the system password (see also the PC Operating Manual).

System Password Mode

specifies the effect of the system password. The setting in this field becomes effective as soon as a system password is installed.

System When the PC is started, the system password enables the operating system to be booted (default entry).

Keyboard When the PC is started, the operating system is booted and the keyboard and mouse are locked. The system password unlocks the keyboard and mouse.

i No prompt to enter the password appears on screen.

System Load

This field specifies the drive from which the operating system can be loaded.

Standard The operating system can be loaded from floppy disk or hard disk (default entry).

Diskette Lock The operating system can only be loaded from hard disk.

Setup Prompt

This field specifies whether the message `Press F2 to enter SETUP` is displayed when the PC is rebooted.

Enabled The message `Press F2 to enter SETUP` is displayed when the system is started (default entry).

Disabled The message is not displayed.

Write protection for floppy disk drive - Diskette Write

This field is used to define whether floppy disks can be written or deleted in the floppy disk drive.

Enabled Read, write and delete floppy disks is possible, if the switch 6 of the switch block is set to *OPEN* (default setting).

Disabled Floppy disks can only be read.

Write protection for System BIOS - Flash Write

This field can assign write protection to the System BIOS.

Enabled The System BIOS can be written to or deleted, provided switch 5 of the switch block is set to *OPEN*. BIOS update from floppy disk is possible (default entry).

Disabled The System BIOS can neither be written to nor deleted. BIOS update from floppy disk is not possible

Soft Power Off

This field specifies whether the PC can be switched off with a program (e.g. SWOFF).

Enabled The PC can be switched off with a program (default entry).

Disabled The PC cannot be switched off with a program.

Remote Power On

specifies whether the PC can be switched on from an external device (e.g. fax).

Enabled The PC can be switched on from an external device (default entry).

Disabled The PC cannot be switched on from an external device.

Set Server Management - Server Menu

You can set the following functions in the *Server* menu:

- Server management mode (in the field marked *Server Management*)
- Boot timeout of the operating system (in the field marked *O/S Boot Timeout*)
- Boot delay (in the field marked *ASR&R Boot Delay*)
- Number of attempts to boot the operating system (in the field marked *Boot Retry Counter*)
- Diagnostic system (in the field marked *Start Diagnostic System*)
- Time monitoring (in the field marked *Hardware Watchdog*)
- Processor status (in the fields marked *CPU 0 Status* and *CPU 1 Status*)
- Error transmission (in the field marked *Pager Configuration*)
- VT100 functionality (in the field marked *VT100 Configuration*)

```
Phoenix BIOS Setup Copyright 1985-95 Phoenix Technologies Ltd.
   Main    Advanced    Security    Server    Exit

   Server Management:        [Enabled]          Item Specific Help

   O/S Boot Timeout:         [Disabled]
   ASR&R Boot Delay:         [3 min]
   Boot Retry Counter:       [3]
   Start Diagnostic System:  [Disabled]
   Hardware Watchdog:        [Enabled]

   CPU 0 Status:             [Enabled]
   CPU 1 Status:             [Enabled]

▶ Pager Configuration
▶ VT100 Configuration

F1  Help    ↑↓  Select Item    -/+   Change Values      F9 Setup Defaults
ESC Exit    ←→ Select Menu    Enter Select ▶ Sub-Menu  F7 Previous Values
```

Example for the *Server* menu

Server Management

specifies the operating mode of the server management BIOS.

Enabled Activates the server management functionality of the system BIOS. This setting is required to enable a server management process of the operating system to communicate with the system BIOS (default entry).

Disabled The server management functionality is deactivated.

O/S Boot Timeout

Condition: Novell NetWare or Windows NT operating system, ServerMan program

O/S Boot Timeout specifies whether a system reboot is performed when the operating system is not able to establish a connection with the server management BIOS within a defined period after system booting. The server management BIOS assumes that there is a boot error and initiates a reboot.

If the operating system does not have a server management process, you must select the setting *Disabled* so that the server management BIOS does not erroneously initiate a reboot. The server management process (agent) is installed using the *ServerMan* program.

2 min, 5 min, 15 min, 30 min, 60 min, 120 min, 240 min
: After the displayed timeout period has expired, the system is rebooted if no connection with a server management process has been established.

Disabled
: No timeout takes place (default entry).

ASR&R Boot Delay

Condition: *Enabled* must be set in the *Server Management* field.

Specifies the boot delay after shutdown due to a fault (e.g. excessively high temperature). The system is rebooted after the set wait period has expired (default entry: *3 min*).

Further possible values are: *1 min*, *2 min*, *5 min*, *7 min*, *10 min*, *15 min* and *20 min*

Boot Retry Counter

Condition: *Enabled* must be set in the *Server Management* field.

Specifies the maximum number of attempts to boot the operating system. After the time set in *O/S Boot Timeout* has expired, each failed retry is followed by a system reboot. Other critical system errors also result in system reboot and in counter decrementing. After the last retry the system is definitively shut down or a diagnostic system started (if still possible and *Enabled*).

0 to *7*
: Number of possible retries (default entry: *3*).

Start Diagnostic System

Condition: *Enabled* must be set in the *Server Management* field.

Specifies what is to happen after the number of system reboots defined in *Boot Retry Counter*.

Enabled
: The test and diagnostic system is started from the first IDE hard disk drive.

Disabled
: The test and diagnostic system is not started (default entry).

Hardware Watchdog

Condition: *Enabled* must be set in the *Server Management* field.

Specifies whether the system performs a reboot if the server management BIOS cannot reset a hardware counter at defined time intervals (system hangs).

Enabled
: System reboot is performed after the time interval has passed (default entry).

Disabled
: No system reboot is performed after the time interval has passed.

CPU 0 Status / CPU 1 Status

Condition: two processors must be installed.

Specifies if the processor can be used or not. You should disable a processor only if it has reported an internal malfunction. The malfunction is indicated in the error log that you can view using the *SCU* or *ServerMan* program.

Enabled The processor can be used by the operating system (default entry).

Disabled The processor cannot be used by the operating system.

i Even if only one processor is installed, both statuses are always displayed (*CPU 0 Status* and *CPU 1 Status*).

Pager Configuration

calls the submenu in which you can make the settings for remote transmission of errors by means of a pager. The server management BIOS can send a message (server number) via an attached modem (external: serial 1, serial 2; internal: modem board) to a pager if a system error occurs. Further settings for remote error transmission must be made by a server management process of the operating system or using *SCU*. The telephone number of the pager server, the subscriber number and the modem initialization sequences can also be entered there.

```
Phoenix BIOS Setup Copyright 1985-95 Phoenix Technologies Ltd.
                                  Server
------------------------------------------------------------------------
|            Pager Configuration                |   Item Specific Help
|-----------------------------------------------|-----------------------
|  Pager:                  [Disabled]           |
|  Pager Interface Addr.:   3E8h                |
|  Server Number:          [   0]               |
|  Baud Rate:               2400                |
|  Com. Setting:            8/1, No Parity      |
|-----------------------------------------------|-----------------------
| F1  Help    ↑↓  Select Item    -/+   Change Values      F9 Setup Defaults
| ESC Exit    ←→  Select Menu    Enter Select ► Sub-Menu  F7 Previous Values
------------------------------------------------------------------------
```

Example for the submenu *Pager Configuration*

Pager

enables or disables the pager.

Enabled In the event of an error a message (server number) is sent to a pager. A modem must be attached that can be accessed at the address set in the field *Pager Interface Addr.*.

Disabled In the event of an error no message is sent to a pager (default entry).

⚠ The modem board must be set so that it can be accessed via the pager interface address (see documentation on the modem board). On external modems attached via *Serial 1* or *Serial 2*, the pager interface address must correspond to the setting for *Serial 1* or *Serial 2* on the screen page *Advanced*.

Pager Interface Addr.

Condition: *Enabled* must be set in the field *Pager*.

Defines the I/O address used to communicate with the modem via a serial interface.

3F8h, 2F8h, 3E8, 2E8h
The specified I/O address is used for communication with the modem. The serial port at which the modem is attached must be set to the same address (default entry: *3E8h*).

Server Number

Condition: *Enabled* must be set in the field *Pager*.

Specifies the number used to uniquely identify the server in a pager message.

0 to *65535* Identification number of the server (default entry: *0*)

Baud Rate

Condition: *Enabled* must be set in the field *Pager*.

Indicates the baud rate of the serial port at which the modem for remote error transmission is attached.

2400 Error transmission is performed at 2400 baud. This value cannot be changed.

Com. Setting

Condition: *Enabled* must be set in the field *Pager*.

Indicates the data format used for error transmission.

8/1, No Parity Error transmission is performed with 8 data bits, 1 stop bit and without a parity check. The values cannot be changed.

VT100 Configuration

calls the submenu in which you make the settings for operating a VT100-compatible terminal on the system. A terminal can be connected directly at the server system via a serial port; screen output can be directed to this terminal in parallel to the attached monitor. Keyboard input at the terminal is likewise sent to the system and treated like input at the attached server keyboard. The BIOS setup of the system, for example, can be called up and modified at the terminal.

It is not possible to enter a system password in *Keyboard Mode* at the VT100 terminal.

```
Phoenix BIOS Setup Copyright 1985-95 Phoenix Technologies Ltd.
                                Server
------------------------------------------------------------------------
              VT100 Configuration                  |   Item Specific Help
------------------------------------------------------------------------
 VT100:                  [Disabled]                |
 VT100 Interface Addr.:   3F8h                     |
 VT100 Interface IRQ:     IRQ 4                    |
 Baud Rate:               9600                     |
 Com. Setting:            8/1, No Parity           |
------------------------------------------------------------------------
 F1  Help    ↑↓  Select Item    -/+   Change Values      F9 Setup Defaults
 ESC Exit    ←→  Select Menu    Enter Select ► Sub-Menu  F7 Previous Values
```

Example for submenu *VT100 Configuration*

VT100

enables or disables VT100 operating mode.

Enabled VT100 operating mode is enabled.

Disabled VT100 operating mode is disabled (default entry).

VT100 Interface Addr.

Condition: *Enabled* must be set in the field *VT100*.

Defines the I/O address for communication with the terminal.

3F8h, 2F8h, 3E8, 2E8h
The specified I/O address is used for communication with the terminal. The serial port at which the terminal is connected must be set to the same address (default entry: *3F8h*).

VT100 IRQ

Condition: *Enabled* must be set in the field *VT100*.

Defines the interrupt for communication with the terminal.

IRQ3, IRQ4, IRQ5, IRQ6, IRQ7
The specified IRQ is used for communication with the terminal. The serial port at which the terminal is connected must be set to the same IRQ (default entry: *IRQ3*).

Baud Rate

Condition: *Enabled* must be set in the field *VT100*.

Specifies the baud rate for communication with the terminal.

1200, 2400, 4800, 9600, 19200
Data communication with the terminal is performed at the rate set (default entry: *9600*).

Com. Setting

Condition: *Enabled* must be set in the field *VT100*.

Indicates the data format used for terminal emulation.

8/1, No Parity The connection is established with 8 data bits, 1 stop bit and without a parity check. The values cannot be changed.

Exiting BIOS Setup - Exit menu

In the *Exit* menu, you can save your settings and exit BIOS Setup.

```
     Phoenix BIOS Setup Copyright 1985-95 Phoenix Technologies Ltd.
  Main    Advanced    Security    Server    Exit

  Save Changes & Exit                          Item Specific Help
  Discard Changes & Exit                       ──────────────────
  Get Default Values
  Load Previous Values
  Save Changes

F1  Help    ↑↓  Select Item    -/+   Change Values      F9 Setup Defaults
ESC Exit    ←→ Select Menu    Enter Select ► Sub-Menu  F7 Previous Values
```

Example for menu *Exit*

Save Changes & Exit

saves the settings you have made and exits BIOS Setup.

Discard Changes & Exit

exits BIOS Setup without saving the new settings.

Get Default Values

reverts all settings to the default values.

Load Previous Values

sets the values which were in effect when BIOS Setup was called.

Save Changes

saves the settings you have made without exiting the BIOS Setup.

Settings on the system board

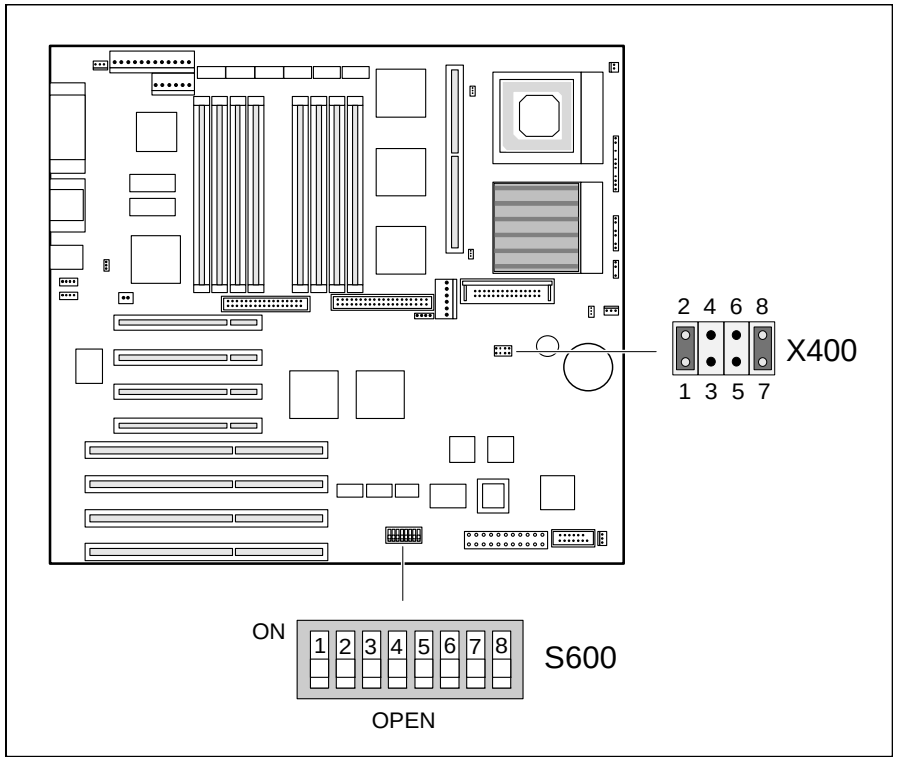

X400 = Processor type
S600/1 = System BIOS recovery
S600/2 = Password protection for BIOS setup
S600/3 = for future use
S600/4 = for future use
S600/5 = System BIOS write-protection
S600/6 = Floppy disk write-protection
S600/7 = reserved (do not change setting *OPEN*)
S600/8 = for future use

Setting processor type - Jumper X400

The setting depends on the processor

The jumpers may only be set as specified in the table below for the particular processor used.

processor	jumper 1 - 2	jumper 3 - 4	jumper 5 - 6	jumper 7 - 8
100 MHz	not inserted	inserted	not inserted	not inserted
P54C 133 MHz	not inserted	inserted	inserted	not inserted
P54C 166 MHz	not inserted	inserted	inserted	inserted

System BIOS recovery - Switch 1

Switch 1 in switch block S600 permits recovery of the system BIOS after an errored update. To recover the BIOS you need a "recovery diskette" (please contact our customer service).

OPEN The system boots with the system BIOS of the system board (default entry).

ON The system boots from the recovery diskette in drive A. Recovery of the system BIOS is performed.

If switch 1 is set to *ON*, the setting of switch 5 has no relevance.

Write protection for system BIOS - Switch 5

Switch 5 in switch block S600 permits or prevents an update of the system BIOS. In order to perform an update of the system BIOS, the write protection for the system BIOS must also be removed in the *BIOS-Setup* (in the *Security* menu set the field for *Flash Write* to *Enabled*). Please contact our customer service if you want to perform a BIOS update.

OPEN	The system BIOS can be overwritten (default entry).
ON	The system BIOS is write-protected.

Write protection for floppy disk drive - Switch 6

Switch 6 specifies whether floppy disks can be written and deleted in the diskette drive when the write protection for the drive has been removed in the *BIOS-Setup* (in the *Security* menu set the field for *Diskette Write* to *Enabled*).

OPEN	Floppy disks can be read, written and deleted (default entry).
ON	Write protection for the diskette drive is active.

Switch 3, 4, 7 and 8

The switch 7 in the switch block S600 is reserved. Do not change the setting (*OPEN*)! The switches 3, 4 and 8 are for future use.

Add-on modules on the system board

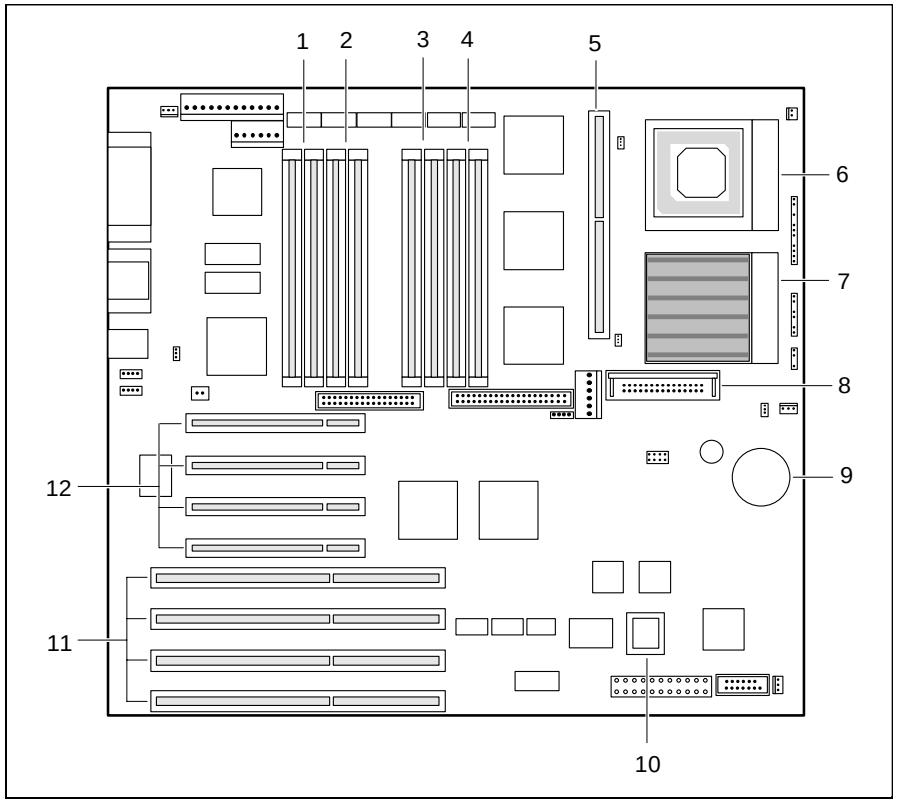

1 = Locations bank 3 for main memory
2 = Locations bank 2 for main memory
3 = Locations bank 1 for main memory
4 = Locations bank 0 for main memory
5 = Location for second-level cache module
6 = Second processor (optional)
7 = First processor/OverDrive processor
8 = Voltage converter
9 = Lithium battery
10 = Flash BIOS
11 = EISA slots (from below: 1, 2, 3, 4)
12 = PCI slots (from above: 1, 2, 3, 4)

Upgrading main memory

The system board has eight slots for memory modules, divided into four memory banks (bank 0 to bank 3). Memory modules of 4, 8, 16, 32 and 64 Mbytes can be used for expanding memory. A memory bank must always be complete and equipped with modules of the same capacity. In other words, a memory bank may have a capacity of 8, 16, 32, 64 or 128 Mbytes and a maximum capacity of 512 Mbytes. Only fast memory modules with an access time of 70 ns or less may be used. The equipping sequence of the four memory banks is arbitrary, i.e. there may be unequipped banks between equipped banks.

i The EISA configuration program (ECU) must be run after a change of memory configuration, and the new configuration must be saved.

Installing memory modules

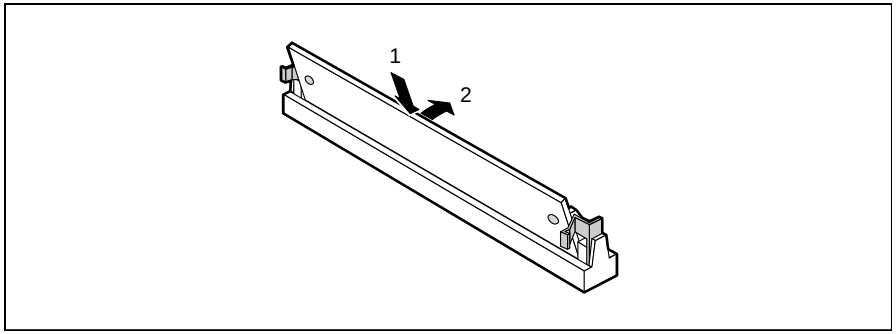

- ▶ Insert the memory module at an angle into the appropriate location (1). Ensure that the key notch and the two holes are correctly aligned with the retaining pins.
- ▶ Tilt the memory module upwards until it snaps into place vertically (2).

Removing a memory module

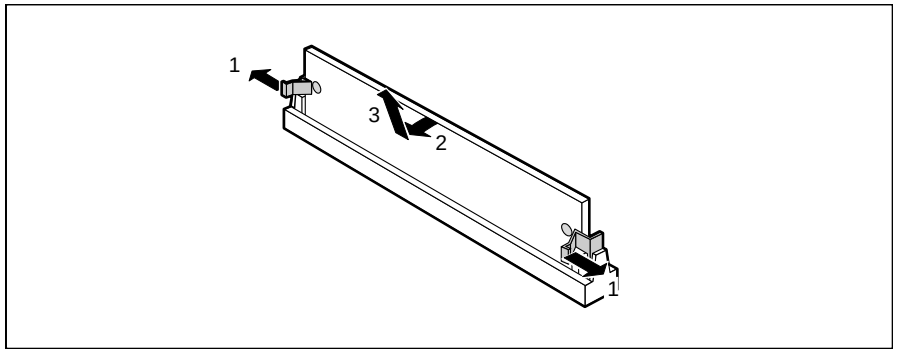

- ► Carefully push the retaining clips at each end of the module outwards (1).
- ► Tilt the memory module to the side (2) and withdraw it at an angle from the location (3).

Replacing the processor

The system board can be upgraded with a faster standard processor, with a second processor or with an OverDrive processor.

The second processor must have the same clock rate as the first. A suitable multiprocessor operating system must be used if dual operation is required.

The second processor is installed in the free socket provided.

The OverDrive processor is installed in the socket for the first processor after removing the old processor. The OverDrive processor cannot be operated with a second processor (dual mode). A second processor must therefore be removed before using the OverDrive processor.

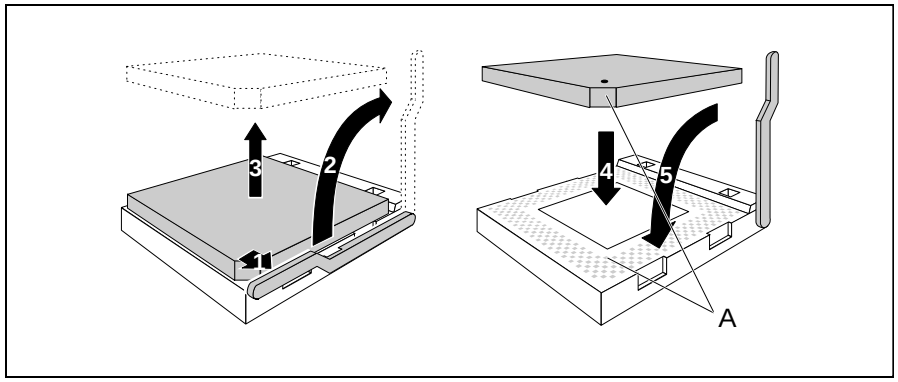

- ► Push the lever in the direction of the arrow (1) and lift it as far as it will go (2).
- ► If you replace one processor by another, disconnect the connector of the temperature monitoring unit of the processor from the system board and lift the processor out of its socket (3).
- ► Insert the new processor in the socket so that the mark on the upper side of the processor matches the mark (A) on the socket (4).

The mark on the processor may be covered by a heat sink. In this case let yourself be guided by the marking in the rows of pins on the underside of the processor.

- ► Push the lever back down so that it snaps into place (5).
- ► Reconnect the connector of the temperature monitoring unit of the processor to the system board.
- ► Insert the jumpers in jumper block X400 as required by the installed processor.

Upgrading the Second-level cache

The system board has a socket for second-level cache. You can install a second-level cache module with 512 Kbytes.

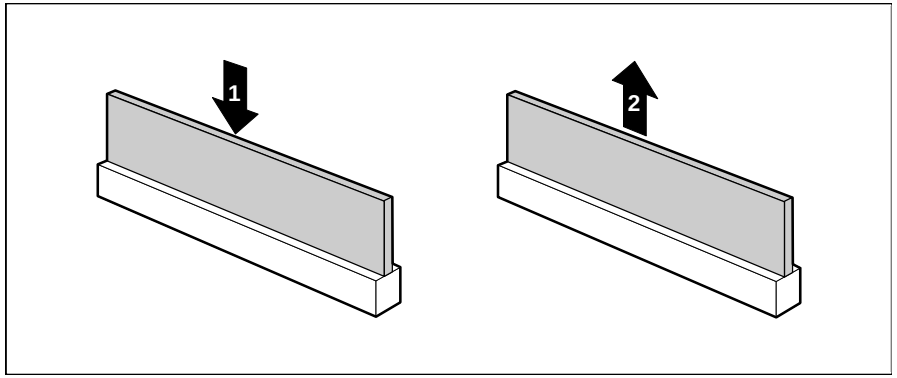

1 = Installing second-level cache 2 = Removing second-level cache

- Insert the second-level cache module into the mounting location, making sure it snaps into place (1).

i In order to make best use of the second-level cache, you must set the *Cache* field in the *Advanced* / *Cache Memory* menu of the *BIOS-Setup* to *Intern And Extern*. You can enhance the performance in the same menu by setting the fields for *Cache System BIOS Area* and *Cache Video BIOS Area* to *Enabled*, and copying ROM parts into the cache with *Cache Memory Regions*.

Removing second-level cache modules

- Pull the second-level cache module out of the mounting location in the direction of the arrow.

Replacing the lithium battery

Incorrect replacement of the lithium battery may lead to a risk of explosion.

The lithium battery must be replaced with an identical battery or a battery type recommended by the manufacturer (CR2032).

Do not throw lithium batteries into the trashcan. Your vendor or dealer or their authorized representatives will take used batteries back free of charge so that they can be recycled or disposed of in the proper manner.

Make sure that you insert the battery the right way round. The plus pole must be on the top!

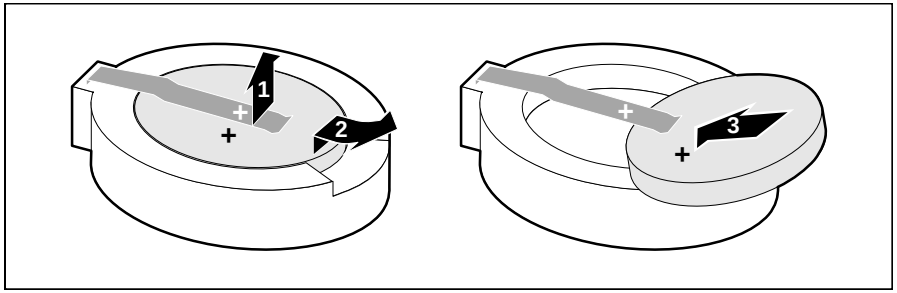

- Lift the contact (1) a few millimeters and remove the battery from its socket (2).
- Insert a new lithium battery of the same type in the socket (3).
- Set the date and the time in the BIOS setup.

Error messages

This chapter contains error messages generated by the system board.

`nn Stuck Key`

Release the key on the keyboard (nn is the hexadecimal code for the key).

`Diskette drive A error`
`Diskette drive B error`

Check the entry for the diskette drive in the *Main* menu and the entry for the diskette drive controller in the *Advanced - Peripheral Configuration* menu of the *BIOS Setup*. Check the connections to the diskette drive.

`Extended RAM Failed at offset: nnnn`
`Failing Bits: nnnn`
`System RAM Failed at offset: nnnn`

Switch the PC off and on again. If the message is still displayed, please contact your sales office or customer service.

`Failure Fixed Disk 0`
`Failure Fixed Disk 1`
`Fixed Disk Controller Failure`

Check the entry for the hard disk drive in the *Main* menu and the entry for the IDE hard disk controller in the *Advanced - Peripheral Configuration* menu of the *BIOS Setup*. Check the connections to the hard disk drive.

`Fail Safe Timer NMI`
`Software NMI`
`Expansion Board was disabled`

Switch the system off and check that the EISA boards are firmly seated and functioning correctly. If this message appears each time you switch the system on, please contact your sales office or customer service.

`Incorrect Drive A - run SETUP`
`Incorrect Drive B - run SETUP`

Correct the entry for the diskette drive in the *Main* menu of the *BIOS Setup*.

`Invalid configuration information`
`Invalid EISA configuration storage`
`Configuration error for slot`

In the *Advanced* menu of the *BIOS-Setup* set the entry for *Reset Configuration Data* to *Yes*. Start the EISA configuration program (ECU) and reconfigure the system. If this message continues to appear each time you switch the system on, please contact your sales office or customer service.

`Invalid NVRAM media type`

Switch the PC off and on again. If the message is still displayed, please contact your sales office or customer service.

`Keyboard controller error`

Connect another keyboard. If the message is still displayed, please contact your sales office or customer service.

`Keyboard error`

Check that the keyboard is connected properly.

`Monitor type does not match CMOS - RUN SETUP`

Correct the entry for the monitor type in the *Main* menu of the *BIOS Setup*.

`Operating system not found`

Check the entry for the hard disk drive and the diskette drive in the *Main* menu of the *BIOS Setup*.

`Parity Check 1`
`Parity Check 2`

Switch the PC off and on again. If the message is still displayed, please contact your sales office or customer service.

`Previous boot incomplete - Default configuration used`

By pressing function key F2 you can check and correct the settings in *BIOS Setup* . By pressing function key F1 the PC starts with incomplete system configuration. If the message is still displayed, please contact your sales office or customer service.

`Real time clock error`

Call the *BIOS Setup* and enter the correct time in the *Main* menu. If the message is still displayed, please contact your sales office or customer service.

`System battery is dead - Replace and run SETUP`

Replace the lithium battery on the system module and redo the settings in the BIOS Setup.

`System Cache Error - Cache disabled`

Switch the PC off and on again. If the message is still displayed, please contact your sales office or customer service.

`System CMOS checksum bad - run SETUP`

Call the *BIOS Setup* and correct the previously made entries or set the default entries.

`System timer error`

Switch the PC off and on again. If the message is still displayed, please contact your sales office or customer service.

Messages d'erreur

Ce chapitre vous donne les messages d'erreur générés par le BIOS du système.

`nn Stuck Key`

Libérez la touche du clavier (*nn* est le code hexadécimal de cette touche).

```
Diskette drive A error
Diskette drive B error
```

Vérifiez dans le menu *Main* du *BIOS setup* l'entrée correspondant au lecteur de disquettes et dans le menu *Advanced - Peripheral Configuration* du *BIOS setup* l'entrée correspondant au controleur du lecteur de disquettes. Vérifiez les connecteurs du lecteur de disquettes.

```
Extended RAM Failed at offset: nnnn
Failing Bits: nnnn
System RAM Failed at offset: nnnn
```

Redémarrez votre PC. Si le message réapparaît, adressez-vous à votre revendeur ou à notre S.A.V.

```
Fixed Disk 0 Failure
Fixed Disk 1 Failure
Fixed Disk Controller Failure
```

Vérifiez dans le menu *Main* du *BIOS setup* l'entrée correspondant au lecteur de disque dur et dans le menu *Advanced - Peripheral Configuration* du *BIOS setup* l'entrée correspondant au controleur du lecteur de disque dur IDE. Vérifiez les connecteurs du lecteur de disquettes.

```
Fail Safe Timer NMI
Software NMI
Expansion Board was disabled
```

Mettez le système hors tension et vérifiez que les modules EISA fonctionnent correctement et sont bien connectés. Si ce message apparaît chaque fois que vous démarrez votre PC, adressez-vous à votre revendeur ou à notre S.A.V.

```
Incorrect Drive A - run Setup
Incorrect Drive B - run Setup
```

Entrez dans le menu *Main* du *BIOS setup* et paramétrez correctement l'entrée correspondant au lecteur de disquettes.

`Invalid configuration information`
`Invalid EISA configuration storage`
`Configuration error for slot`

Pour l'entrée *Reset Configuration Data* du menu *Advanced* du *BIOS setup*, activez le paramètre *Yes*. Chargez le programme de configuration EISA (ECU) et reconfigurez le système. Si ce message apparaît encore chaque fois que vous démarrez votre PC, adressez-vous à votre revendeur ou à notre S.A.V.

`Invalid NVRAM media type`

Redémarrez votre PC. Si le message réapparaît, adressez-vous à votre revendeur ou à notre S.A.V.

`Keyboard controller error`

Connectez un autre clavier. Si le message réapparaît, adressez-vous à votre revendeur ou à notre S.A.V.

`Keyboard error`

Assurez-vous que le clavier est correctement connecté.

`Monitor type does not match CMOS - RUN SETUP`

Entrez dans le menu *Main* du *BIOS setup* et paramétrez correctement l'entrée correspondant au type d'écran.

`Operating system not found`

Vérifiez dans le menu *Main* du *BIOS setup* les entrées correspondant au lecteur de disque dur et au lecteur de disquettes.

`Parity Check 1`
`Parity Check 2`

Redémarrez votre PC. Si le message réapparaît, adressez-vous à votre revendeur ou à notre S.A.V.

`Previous boot incomplete - Default configuration used`

Appuyez la touche de fonction F2 pour vérifier et corriger les valeurs dans *BIOS Setup.* Si vous appuyez la touche de fonction F1 le PC démarre en configuration incomplète. Si le message réapparaît, adressez-vous à votre revendeur ou à notre S.A.V.

`Real time clock error`

Appelez le *BIOS setup* et entrez l'heure exacte dans le menu *Main*. Si le message réapparaît, adressez-vous à votre revendeur ou à notre S.A.V.

`System battery is dead - Replace and run SETUP`

Remplacez la batterie au lithium sur la carte système et procédez à de nouveaux réglages dans le *BIOS setup*.

`System Cache Error - Cache disabled`

Redémarrez votre PC. Si le message réapparaît, adressez-vous à votre revendeur ou à notre S.A.V.

`System CMOS checksum bad - run SETUP`

Appelez le *BIOS setup* et corrigez les réglages effectués en dernier lieu ou activez les réglages standard.

`System timer error`

Redémarrez votre PC. Si le message réapparaît, adressez-vous à votre revendeur ou à notre S.A.V.

Mensajes de error

Aquí se describen los mensajes de error que son generados por el BIOS-Setup.

`nn Stuck Key`

Desbloquee la tecla del teclado (*nn* es el código hexadecimal para la tecla).

`Diskette drive A error`
`Diskette drive B error`

En en menú *Main* del *BIOS-Setup* verifique el valor correspondiente a la unidad de disquete y en el menú *Advanced - Peripheral Configuration* el valor para el controlodor de la unidad de disquete. Controle las conexiones de la unidad de disquete.

`Extended RAM Failed at offset: nnnn`
`Failing Bits: nnnn`
`System RAM Failed at offset: nnnn`

Arranque de nuevo el PC. Si sigue visualizándose este mensaje, diríjase a su distribuidor o a nuestro servicio de postventa.

`Fixed Disk 0 Failure`
`Fixed Disk 1 Failure`
`Fixed Disk Controller Failure`

En el menú *Main* del *BIOS-Setup* verifique los valores para la unidad de disco duro y en el menú *Advanced - Peripheral Configuration* el valor para el controlador de unidad IDE. Controle las conexiones y los puentes de la unidad de disco duro.

`Fail Safe Timer NMI`
`Software NMI`
`Expansion Board was disabled`

Desconecte el sistema y verifique si los módulos EISA funcionan y han sido conectados correctamente. Si aparece este mensaje cada vez que conecta el sistema, diríjase a su distribuidor o al servicio de postventa.

`Incorrect Drive A - run Setup`
`Incorrect Drive B - run Setup`

Defina correctamente el registro de la unidad de disquete en el menú principal del *BIOS-Setup*.

`Invalid configuration information`
`Invalid EISA configuration storage`
`Configuration error for slot`

En el menú *Advanced* del *BIOS-Setup* ajuste el valor *Yes* para *Reset Configuration Data*. Arranque el programa de configuración EISA (ECU) y configure de nuevo su sistema. Si sigue visualizándose este mensaje cada vez que arranca su sistema, diríjase a su distribuidor o a nuestro servicio de postventa.

`Invalid NVRAM media type`

Arranque de nuevo el PC. Si sigue visualizándose este mensaje, diríjase a su distribuidor o a nuestro servicio de postventa.

`Keyboard controller error`

Conecte otro teclado. Si sigue visualizándose este mensaje, diríjase a su distribuidor o a nuestro servicio de postventa.

`Keyboard error`

Compruebe si el teclado está conectado correctamente.

`Monitor type does not match CMOS - RUN SETUP`

Defina correctamente en el menú principal del *BIOS-Setup* el registro para el tipo de pantalla..

`Operating system not found`

Compruebe en el menú principal del *BIOS-Setup* los registros de la unidad de disco duro y de la unidad de disquete.

`Parity Check 1`
`Parity Check 2`

Arranque de nuevo el PC. Si sigue visualizándose este mensaje, diríjase a su distribuidor o a nuestro servicio de postventa.

`Previous boot incomplete - Default configuration used`

Pulsando la tecla F2 puede verificar y corregir los registros del BIOS-Setup. Pulsando la tecla F1 , el sistema arranca con la configuración incompleta. Si sigue visualizándose este mensaje, diríjase a su distribuidor o a nuestro servicio de postventa.

`Real time clock error`

Active el *BIOS-Setup* y registre la hora correcta en el menú principal (*Main*). Si sigue visualizándose este mensaje, diríjase a su distribuidor o a nuestro servicio de postventa..

`System battery is dead - Replace and run SETUP`

Sustituya la pila de litio en el módulo de sistema y repita las operaciones de ajuste en el *BIOS-Setup*..

`System Cache Error - Cache disabled`

Arranque de nuevo el PC. Si sigue visualizándose este mensaje, diríjase a su distribuidor o a nuestro servicio de postventa.

`System CMOS checksum bad - run SETUP`

Active el *BIOS-Setup* y corrija los últimos registros hechos o ajuste los registros estándar.

`System timer error`

Arranque de nuevo el PC. Si sigue visualizándose este mensaje, diríjase a su distribuidor o a nuestro servicio de postventa.

Messagi di errore

I messaggi di errore emessi dal system BIOS sono descritti qui in seguito.

`nn Stuck Key`

Liberate il tasto dalla tastiera (*nn* indica il codice esadecimale del tasto).

```
Diskette drive A error
Diskette drive B error
```

Controllate nel *BIOS-Setup*, menu *Main*, il valore indicato per il drive dei dischetti e nel menu *Advanced - Peripheral Configuration* il valore per il controller del drive dei dischetti. Controllate i collegamenti del drive per dischetti.

```
Extended RAM Failed at offset: nnnn
Failing Bits: nnnn
System RAM Failed at offset: nnnn
```

Riavviate nuovamente il PC. Se il messaggio ricompare rivolgeteVi al Vostro rivenditore o al nostro servizio di assistenza tecnica..

```
Fixed Disk 0 Failure
Fixed Disk 1 Failure
Fixed Disk Controller Failure
```

Controllate nel *BIOS-Setup*, menu *Main*, i valori per il drive del disco fisso e nel menu *Advanced - Peripheral Configuration* il valore per il controller del driver IDE. Controllate i collegamenti ed i ponticelli del drive del disco fisso.

```
Fail Safe Timer NMI
Software NMI
Expansion Board was disabled
```

Spegnete il sistema e verificate che i componenti EISA funzionino e siano collegati in modo corretto. Se questo messaggio compare dopo l’accensione, rivolgeteVi al Vostro rivenditore o al nostro servizio di assistenza tecnica.

```
Incorrect Drive A - run Setup
Incorrect Drive B - run Setup
```

Impostate nel BIOS-Setup del menu principale (*Main*) il valore corretto per il drive per dischetti.

`Invalid configuration information`
`Invalid EISA configuration storage`
`Configuration error for slot`

Impostate nel *BIOS-Setup* del menu *Advanced* il valore per *Reset Configuration Data* su *Yes*. Avviate il programma di configurazione EISA (ECU) e riconfigurate il sistema. Se questo messaggio continuo ad venir visualizzato dopol'accensione, rivolgeteVi al Vostro rivenditore oppure al nostro servizio di assistenza tecnica.

`Invalid NVRAM media type`

Riavviate nuovamente il PC. Se il messaggio ricompare rivolgeteVi al Vostro rivenditore o al nostro servizio di assistenza tecnica.

`Keyboard controller error`

Collegate un'altra tastiera. Se il messaggio ricompare rivolgeteVi al Vostro rivenditore o al nostro servizio di assistenza tecnica.

`Keyboard error`

Controllate che la tastiera sia collegata correttamente.

`Monitor type does not match CMOS - RUN SETUP`

Impostate nel *BIOS-Setup* del menu principale (*Main*) il valore corretto per il tipo di monitor.

`Operating system not found`

Controllate nel BIOS-Setup del menu principale i valori indicati per il drive per il disco rigido e per il drive per dischetti.

`Parity Check 1`
`Parity Check 2`

Riavviate nuovamente il PC. Se il messaggio ricompare rivolgeteVi al Vostro rivenditore o al nostro servizio di assistenza tecnica.

`Previous boot incomplete - Default configuration used`

Premendo il tasto funzione F2 potete verificare e corregere le impostazioni nel *BIOS-Setup*. Premendo il tasto funzione F1 , il PC viene avviato con la cofigurazione di sistema completa. Se il messaggio ricompare rivolgeteVi al Vostro rivenditore o al nostro servizio di assistenza tecnica.

`Real time clock error`

Richiamate il *BIOS-Setup* ed inserite nel menu principale (*Main*) l'ora esatta. Se il messaggio ricompare rivolgeteVi al Vostro rivenditore o al nostro servizio di assistenza tecnica.

`System battery is dead - Replace and run SETUP`

Sostituite la batteria al litio dell'unità di sistema ed inserite nuovamente i valori di impostazione nel *BIOS-Setup*.

`System Cache Error - Cache disabled`

Riavviate nuovamente il PC. Se il messaggio ricompare rivolgeteVi al Vostro rivenditore o al nostro servizio di assistenza tecnica..

`System CMOS checksum bad - run SETUP`

Richiamate il *BIOS-Setup* e correggete gli ultimi valori impostati oppure indicati i valori standard.

`System timer error`

Riavviate nuovamente il PC. Se il messaggio ricompare rivolgeteVi al Vostro rivenditore o al nostro servizio di assistenza tecnica.

Felmeddelanden

Nedan beskrivs de felmeddelanden som system-BIOS matar ut på systemkomponenten.

`nn Stuck Key`

Frigör den angivna tangenten (*nn* är tangentens hexadecimalkod).

`Diskette drive A error`
`Diskette drive B error`

Kontrollera inställningarna för diskettenheten i menyn *Main* i *BIOS-Setup*-menyn och inställningarna för diskettenhets-controllern i menyn *Advanced - Peripheral Configuration*. Kontrollera att diskettenheten är korrekt ansluten.

`Extended RAM Failed at offset: nnnn`
`Failing Bits: nnnn`
`System RAM Failed at offset: nnnn`

Starta upp PCn på nytt. Om meddelandet fortfarande visas bör du kontakta din återförsäljare eller vår kundservice.

`Fixed Disk 0 Failure`
`Fixed Disk 1 Failure`
`Fixed Disk Controller Failure`

Kontrollera inställningarna för hårddiskenheten i menyn *Main* i *BIOS-Setup*-menyn och inställningarna för IDE-drivenhets-controllern i menyn *Advanced - Peripheral Configuration*. Kontrollera hårddiskenhetens kontakter och kopplingspaneler.

`Fail Safe Timer NMI`
`Software NMI`
`Expansion Board was disabled`

Stäng av systemet och kontrollera att EISA-komponenterna fungerar och är korrekt anslutna. Om detta meddelande visas varje gång maskinen sätts på, bör du kontakta din återförsäljare eller vår kundservice.

`Incorrect Drive A - run Setup`
`Incorrect Drive B - run Setup`

Korrigera inställningen för diskettenheten i menyn *Main* i *BIOS-Setup*-menyn.

`Invalid configuration information`
`Invalid EISA configuration storage`
`Configuration error for slot`

Ställ in värdet *Yes* för *Reset Configuration Data* i menyn *Advanced* i *BIOS-Setup*-menyn. Starta EISA-konfigurationsprogrammet (ECU), och konfigurera om systemet på nytt. Om detta meddelande visas varje gång maskinen sätts på, bör du kontakta din återförsäljare eller vår kundservice.

`Invalid NVRAM media type`

Starta upp PCn på nytt. Om meddelandet fortfarande visas bör du kontakta din återförsäljare eller vår kundservice.

`Keyboard controller error`

Anslut ett annat tangentbord. Om meddelandet fortfarande visas bör du kontakta din återförsäljare eller vår kundservice.

`Keyboard error`

Kontrolla att tangentbordet är korrekt anslutet.

`Monitor type does not match CMOS - RUN SETUP`

Korrigera inställningarna för bildskärmtypen i menyn *Main* i *BIOS-Setup* menyn.

`Operating system not found`

Kontrollera inställningarna för hårddisken och diskettenheten i menyn *Main* i *BIOS-Setup*-menyn.

`Parity Check 1`
`Parity Check 2`

Starta upp PCn på nytt. Om meddelandet fortfarande visas bör du kontakta din återförsäljare eller vår kundservice.

`Previous boot incomplete - Default configuration used`

Om du trycker på funktionstangenten F2 , kan du kontrollera och korrigera inställningarna i *BIOS-Setup*. Om du trycker på funktionstangenten F1 startas PCn med den ofullständige systemkonfigurationen. Om meddelandet fortfarande visas bör du kontakta din återförsäljare eller vår kundservice.

`Real time clock error`

Ropa upp *BIOS-Setup*-menyn och ställ in korrekt klockslag i menyn *Main*. Om meddelandet fortfarande visas bör du kontakta din återförsäljare eller vår kundservice..

`System battery is dead - Replace and run SETUP`

Byt ut litiumbatteriet på systemkomponenten och genomför inställningarna i *BIOS-Setup*-menyn på nytt.

`System Cache Error - Cache disabled`

Starta upp PCn på nytt. Om meddelandet fortfarande visas bör du kontakta din återförsäljare eller vår kundservice.

`System CMOS checksum bad - run SETUP`

Ropa upp *BIOS-Setup*-menyn. Korrigera de senast gjorda inställningarna eller ställ in standardvärdena igen.

`System timer error`

Starta upp PCn på nytt. Om meddelandet fortfarande visas bör du kontakta din återförsäljare eller vår kundservice.

Foutmeldingen

Vervolgens worden de foutmeldingen beschreven die het BIOS-systeem op de systeembouwgroep geeft.

`nn Stuck Key`

Laat de toets van het toetsenbord los (*nn* is de hexadecimale code voor de toets).

```
Diskette drive A error
Diskette drive B error
```

Controleer in de *BIOS-Setup*, in het menu *Main*, de instelling voor het diskettestation en in het menu *Advanced - Peripheral Configuration* de instelling voor de diskettestation-controller. Controleer de aansluitingen van het diskettestation.

```
Extended RAM Failed at offset: nnnn
Failing Bits: nnnn
System RAM Failed at offset: nnnn
```

Start de PC opnieuw. Als de melding opnieuw verschijnt, neem dan a.u.b. contact op met uw dealer of met onze klantendienst..

```
Fixed Disk 0 Failure
Fixed Disk 1 Failure
Fixed Disk Controller Failure
```

Controleer in de *BIOS-Setup*, in het menu *Main*, de instellingen voor de harde schijf en in het menu *Advanced - Peripheral Configuration* de instelling voor de IDE-controller. Controleer de aansluitingen en de doorverbindingen van de harde schijf.

```
Fail Safe Timer NMI
Software NMI
Expansion Board was disabled
```

Schakel het systeem uit en ga na of de EISA-modules goed werken en goed zijn verbonden. Als deze melding altijd verschijnt als het systeem wordt ingeschakeld, moet u contact opnemen met uw verkoper of met onze klantendienst.

```
Incorrect Drive A - run Setup
Incorrect Drive B - run Setup
```

Stel in de setup van het *BIOS*, in het menu *Main*, het diskettestation op de juiste wijze in.

`Invalid configuration information`
`Invalid EISA configuration storage`
`Configuration error for slot`

Zet in de *BIOS-Setup* in het menu *Advanced* de instelling voor *Reset Configuration Data* op *Yes*. Start het EISA-configuratieprogramma (FCU) en configureer het systeem opnieuw. Als deze melding weer verschijnt telkens het systeem wordt ingeschakeld, moet u contact opnemen met uw verkoper of met onze klantendienst..

`Invalid NVRAM media type`

Start de PC opnieuw. Als de melding opnieuw verschijnt, neem dan a.u.b. contact op met uw dealer of met onze klantendienst.

`Keyboard controller error`

Sluit een ander toetsenbord aan. Als de melding opnieuw verschijnt, neem dan contact op met uw dealer of met onze klantendienst.

`Keyboard error`

Controleer of het toetsenbord goed is aangesloten.

`Monitor type does not match CMOS - RUN SETUP`

Stel in de setup van het *BIOS*, in het menu *Main*, het monitortype op de juiste wijze in.

`Operating system not found`

Controleer in de setup van het *BIOS*, in het menu *Main*, de instellingen van de harde schijf en het diskettestation..

`Parity Check 1`
`Parity Check 2`

Start de PC opnieuw. Als de melding opnieuw verschijnt, neem dan a.u.b. contact op met uw dealer of met onze klantendienst.

`Previous boot incomplete - Default configuration used`

Als u op de functietoets F2 drukt, kunt u in de setup van het *BIOS* de instelling uittesten en verbeteren. Als u op de functietoets F1 drukt, start de PC met de onvolledige systeemconfiguratie. Als de melding opnieuw verschijnt, neem dan a.u.b. contact op met uw dealer of met onze klantendienst.

`Real time clock error`

Roep de setup van het *BIOS* op en stel in het menu *Main* de juiste tijd in.Als de melding opnieuw verschijnt, neem dan a.u.b. contact op met uw dealer of met onze klantendienst.

`System battery is dead - Replace and run SETUP`

Vervang de lithiumbatterij op het motherboard en stel de BIOS opnieuw in.

`System Cache Error - Cache disabled`

Start de PC opnieuw. Als de melding opnieuw verschijnt, neem dan a.u.b. contact op met uw dealer of met onze klantendienst.

`System CMOS checksum bad - run SETUP`

Roep de setup van het *BIOS* op en corrigeer wat u voor het laatst heeft ingesteld of stel de defaultwaarden in.

`System timer error`

Start de PC opnieuw. Als de melding opnieuw verschijnt, neem dan a.u.b. contact op met uw dealer of met onze klantendienst.

Index

↵ 1
► 1
␣ 1
528 Mbyte hard disk capacity 13

A
Access Mode, Large hard disk 27
Activating Plug&Play 26
Adding main memory 45
Additional settings 25
Add-on modules 45
  on the system board 45
Address, pager 36
Addressing IDE hard disk 13
Advanced BIOS Setup 16
Advanced system settings 16
Advanced System Configuration 25
APIC 25
ASR&R Boot Delay 33
Assigning
  Interrupt 5
  PCI interrupts 23
  PCI-VGA interrupt 24
Attempts to boot operating system 34
Available Base Memory 15
Available Extended Memory 15

B
Base Memory 15
Battery 7
Baud Rate 37, 39
Bidirection 21
BIOS
  mapping 18
  recovery 42
  Update 42
BIOS-Setup 9
  advanced system settings 16
  exiting 40
  menu 9
  security 28
  System settings 10
  terminating 40
  write protection 43
Board 3
Boot
  Delay 33
  error 33
  Options, settings 14
  Retry Counter 34
  routine, settings 14, 15
  Timeout 33
Booting operating system 30, 33, 34

C
Cache 17
  function 18
  upgrading Second-level cache 49
  write access 18
Cache Memory 17
  setting 17
  Regions 18
Cache Mode 18
Cache System BIOS Area 18
Cache Video BIOS Area 18
Changing lithium battery 50
Com. Setting 37, 39
Configuration data, settings 27
Configuring
  BIOS Setup 9
  pager 35
  parallel port 21
  PCI slot 23
  serial ports 21
  VT100 38

Connectors 3
Controller
  floppy disk drive 22
  monitor 26
  setting 20
Copy ROM areas in the RAM 19
Counter Boot Retry 34
Courier 1
CPU Status 35
Cylinders 12

D
Date, setting 10
Deactivating Plug&Play 26
Default values 40
Default Latency Timer 24
Delay, boot 33
Diagnostic System 34
Disabling
  APIC 25
  floppy disk controller 22
  Hard Disk controller 22
  Hardware Watchdog 34
  mouse controller 22
  operating mode, VT100 38
  Pager 36
  Processor 35
Discard Changes & Exit 40
Disk controller, setting 20
Diskette A 11
Diskette B 11
Diskette Controller 22
Diskette Write 31
Diskette write protection 31
Display, type 15

E
ECP, Enhanced Capability Port 21
EISA slots, location 45
Enabling
  APIC 25
  floppy disk controller 22
  Hard Disk controller 22
  Hardware Watchdog 34
  mouse controller 22
  operating mode, VT100 38
  Pager 36
  Processor 35
  Server Number 36
Enhancing
  performance 17, 18, 19, 20, 49
EPP, Enhanced Parallel Port 21
Erreur, messages 54
Error
  messages 51
  remote transmission 35
  transmission 37
Error, mensajes 57
Errore, messagi 60
ESD modules 8
Exit menu 40
Exiting BIOS Setup 40
Extended Memory 15
External cache, Second-level Cache 17
  write access 18
  setting 17

F
Features system board 2
Felmeddelanden 63
First connector
  IDE hard disk controller 22
First processor, location 45
First-level cache (internal cache) 17
  setting 17
Flash BIOS 31
  location 45
  write protection
Flash Write 31
Floppy disk controller
  disabling 22
  enabling 22

Floppy disk drive
type 11
write protection 43
Floppy disk write-protection 31
Foutmeldingen 66

G
Get Default Values 40

H
Handle modules with ESDs 8
Hard Disk drive 11
access settings 27
capacity 13
settings 11
parameters 12
addressing 13
Hard Disk Type 12
Hard Disk Controller 22
Hard Disk Controller, setting 22
Hardware
configuration 9
Watchdog 34
HD controller, setting 20
Heads 12
High temperature 33

I
I/O Address
Pager 36
VT100 39
IDE hard disk drive 11, 13
addressing 13
settings 11
IDE Hard Disk Controller, setting 22
Important notes 7
Increasing
performance 17, 18, 19, 20, 49
Installing
memory modules 46
Second-level cache 49
Interfaces 3
configuring 21
setting 20, 37
serial 21
Internal Cache Memory 17
write access 18
setting 17
Interrupt
Controller 25
table 5
VT100 39
IRQ 5
VT100 39

J
Jumper 3
block X400 48
settings 41
X400 42

L
Large hard disk capacity 13
Large Disk Access Mode 27
Latency Timer 25
LBA, Logical Block Addressing 13
mode 13
translation 13
Lithium battery 7
changing 50
location 45
Load Previous Values 40
Loading operating system 30
Location
connectors 3
EISA slots 45
first processor 45
Flash BIOS 45
jumper 41
lithium battery 45
main memory 45
OverDrive processor 45
PCI slots 45

Location
ports 3
second processor 45
second-level cache module 45
switch block 41
Voltage converter 45
Logical Block Addressing 13

M
Main Memory 15, 45
location 45
upgrading 45
Main menu 10
Mapping
BIOS 18
ROM 18
Memory
Base Memory 15
Extended Memory 15
main 15, 45
upgrading main memory 45
upgrading Second-level cache 49
Memory modules 45
installing 46
removing 47
Mensajes de error 57
Menu
BIOS Setup 9
Exit 40
main 10
server 32
Messages 51
Press F2 to enter SETUP 30
Messages d'erreur 54
Messagi di errore 60
Mode, System Password Mode 30
Modem, Pager Configuration 35
Modules
on the system board 45
with ESDs 8
Monitor
controller 26
type 15
Mouse controller
disabling 22
enabling 22
Multiprocessor
Interrupt Controller 25
operating systems 25

N
Notational conventions 1
Novell Netware 25, 33
Number of attempts
to boot the operating system 34
Number of system reboots 34

O
O/S Boot Timeout 33
Operating mode
Server management 32
VT100 38
Operating system 25, 26, 33
loading 30
starting 30
OverDrive processor 47
location 45

P
P54C 42
Pager 36
Address 36
Configuration 35
Interface Addr. 36
Parallel port 21
configuring 21
Parallel Mode 21
Parameter
hard disk drive 11, 12
Password
setting 29
Setup 28
System 29
System Password Mode 30
PCI, Peripheral Component
Interconnect 1

PCI Configuration 23
PCI Device, Slot #1 24, 25
PCI Device, Slot #2 24, 25
PCI Device, Slot #3 24, 25
PCI interrupts assigning 23
PCI slot
  configuration 23
  location 45
  setting 24, 25
PCI VGA interrupt 24
Performance
  increasing 17, 18, 19, 20, 49
Period after system booting 33
Peripheral Configuration 20
Peripherals, setting 20
Plug&Play
  O/S 26
  settings 26
Ports 3
  configuring 21
  serial 21
  setting 20, 37
Possible screen resolutions 4
POST Error Halt 14
Power Off 31
Power On, remote 31
Press F2 to enter SETUP 30
Previous Values 40
Printer 21
Processor
  internal Cache 17
  OverDrive 47
  replacing 47
  Status 35
  type, setting 42
  upgrading 47
Program
  SCU 35
  ServerMan 33, 35

Q

Quick self-test 15
Quick boot 15
Quotation marks 1

R

RAM (Random Access Memory) 19
  memory 45
Recovery Diskette 42
Recovery, System BIOS 42
Reduced self-test 15
Remote error transmission 35, 37
Remote Power On 31
Removing
  main memory module 47
  second-level cache modules 49
Replacing the
  lithium battery 50
  processor 47
Reset Configuration Data 27
Resolutions, screen 4
Retry Counter 34
ROM (Read Only Memory) 19
  areas 20
  areas in the RAM 19
  mapping 18

S

S600, switch block 41
Save Changes 40
Save Changes & Exit 40
Saving settings 40
Screen resolutions 4
SCU 35
  Pager Configuration 35
Second connector
  IDE hard disk controller 22
Second processor 47
  location 45
Second-level Cache 17
  setting 17
  write access 18

second-level cache modules
  installing 49
  location 45
  removing 49
  upgrading 49
Sector/Track 12
Security features 28
Security, BIOS Setup 28
Self-test, settings 14, 15
Serial port, baud Rate 37
Serial ports 21
Serial 1, port 21
Serial 2, port 21
Server Management 32
  operating mode 32
  setting 32
Server Menu 32
Server Number 36
ServerMan 35
  program 33
Set Server Management 32
Set Setup Password 29
Set System Password 29

Setting
  BIOS Setup 9, 28
  BIOS-Update 42
  Cache Memory 17
  configuration data 27
  controller 20
  date 10
  hard disk access 27
  hard disk drive 13
  IDE Hard Disk Controller 22
  IDE hard disk drive 11
  interfaces 20
  jumper 41
  monitor type 15
  mouse controller 22
  PCI slot 23, 24, 25
  peripherals 20
  Plug&Play 26
  ports 20
  processor type 42
  saving 40
  security features 28
  self-test 15
  serial ports 21
  Setup Password 29

Setting
  System BIOS recovery 42
  system board 41
  system startup 14, 15
  System Password 30
  time 10
  type of floppy disk drive 11
  Video Subsystem 26
  write protection floppy disk drive 43
  write protection system BIOS 43
Setup 9
Setup Password 28
  Lock 29
  setting 29
Setup Prompt 30
Shadow Memory 19
Shadow Memory Regions 20

Slots 3
PCI configuration 23
Sockets 3
Soft Power Off 31
Specifications 2
Starting
Diagnostic System 34
operating system 30
Status, CPU 35
Switch 1, System BIOS recovery 42
Switch 3 43
Switch 4 43
Switch 5
write protection system BIOS 43
Switch 6
write protection floppy disk drive 43
Switch 7 43
Switch 8 43
Switch block S600 42, 43
location 41
SWOFF 31
System BIOS
recovery 42
recovery, switch 1 42
write protection 31, 43
System board 3
add-on modules 45
settings 41
System booting 33
System settings
additional 25
BIOS Setup 10
Main menu 10
System startup, settings 14, 15
System BIOS 19
System BIOS Area 18
System Date 10
System Load 30
System Password 28
Mode 30
setting 29
System Shadow 19

T
Technical
information 9
specifications 2
Terminal 38
Terminating BIOS Setup 40
Test routine, settings 14, 15
Time, setting 10
Timeout, O/S Boot 33
Transfer Mode 13
setting 21
Transfer rates 21
Transmission of errors 35
Type
floppy disk drive 11
Hard Disk drive 12
monitor 15

U
Update, BIOS 42
Upgrading
main memory 45
processor 47
Second-level cache 49
Upgrading, Second-level cache 49
Using cache 18

V
Values, default 40
VGA Interrupt 24
Video
Display 15
Shadow 19
subsystem 26
Video BIOS 19
Video BIOS Area 18
Voltage converter, location 45

VT100 38
Address 39
Baud Rate 39
Com. Setting 39
Configuration 38
Interface Addr 39
Interrupt 39
IRQ 39
operating mode 38

W
Watchdog 34
Windows NT 33
Write Back 18
Write Precomp 12
Write protection
floppy disk 31
floppy disk drive 43
system BIOS 31, 43
Write Through 18

X
X400, jumper 41, 42