GMB-6292 V0 RD SCHEMATIC DRAWING

Rev D Released on 21 February 2000

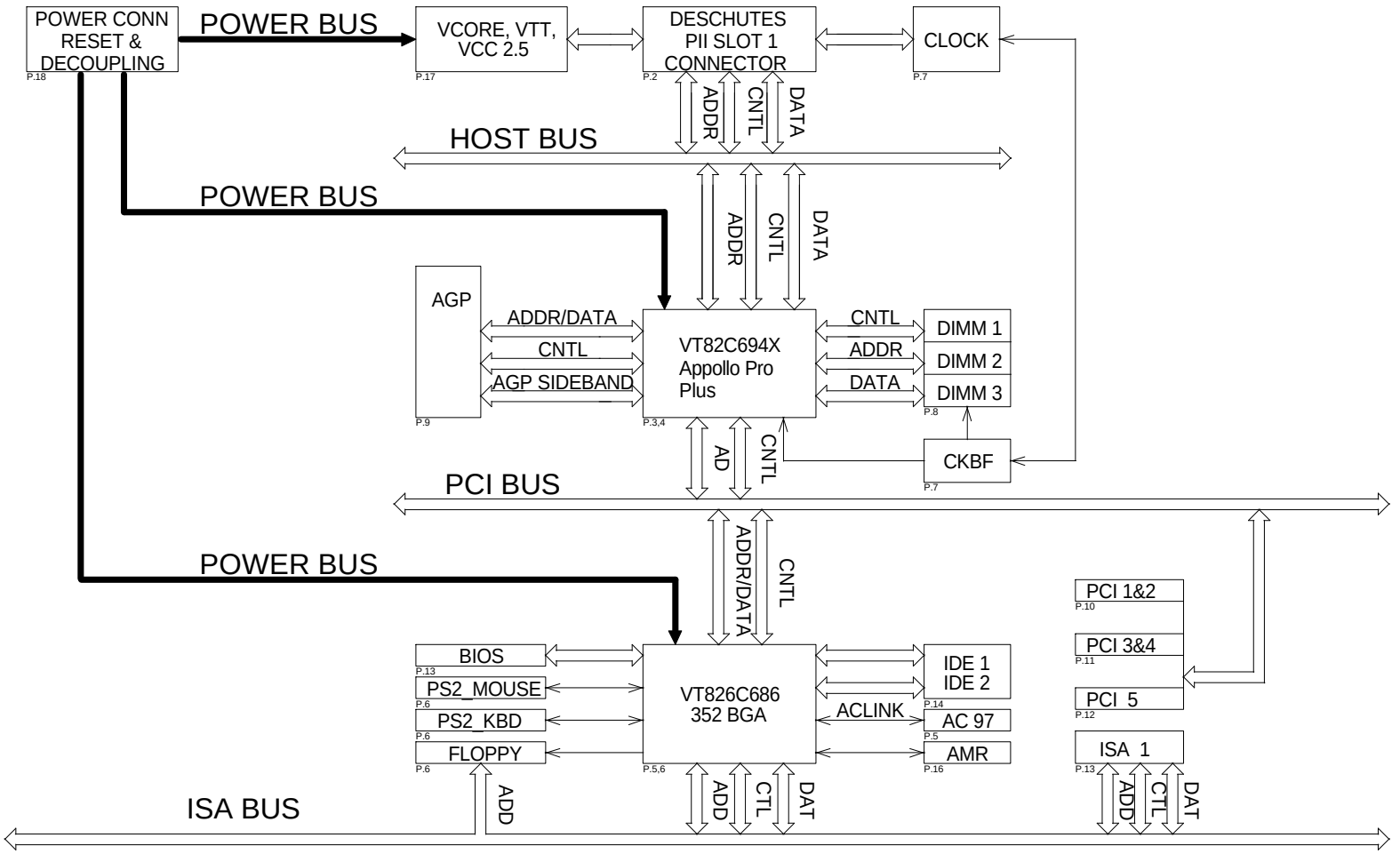

| LINK
| 02_CPU
| 03_694A
| 04_694B
| 05_686A
| 06_686B
| 07_CLK
| 08_DIMM
| 09_AGP
| 10_PCI12
| 11_PCI34
| 12_PCI5
| 13_ISA
| 14_PORT
| 15_AUDIO
| 16_AMR
| 17_CPUPWR
| 18_ATX

Gemlight Computer Ltd.

Title: BLOCK DIAGRAM AND VERSION CONTROL		
Size: B	Document Number: GMB-6292 V0 RD	Rev: D
Date: Monday, February 21, 2000	Sheet 1 of 18	

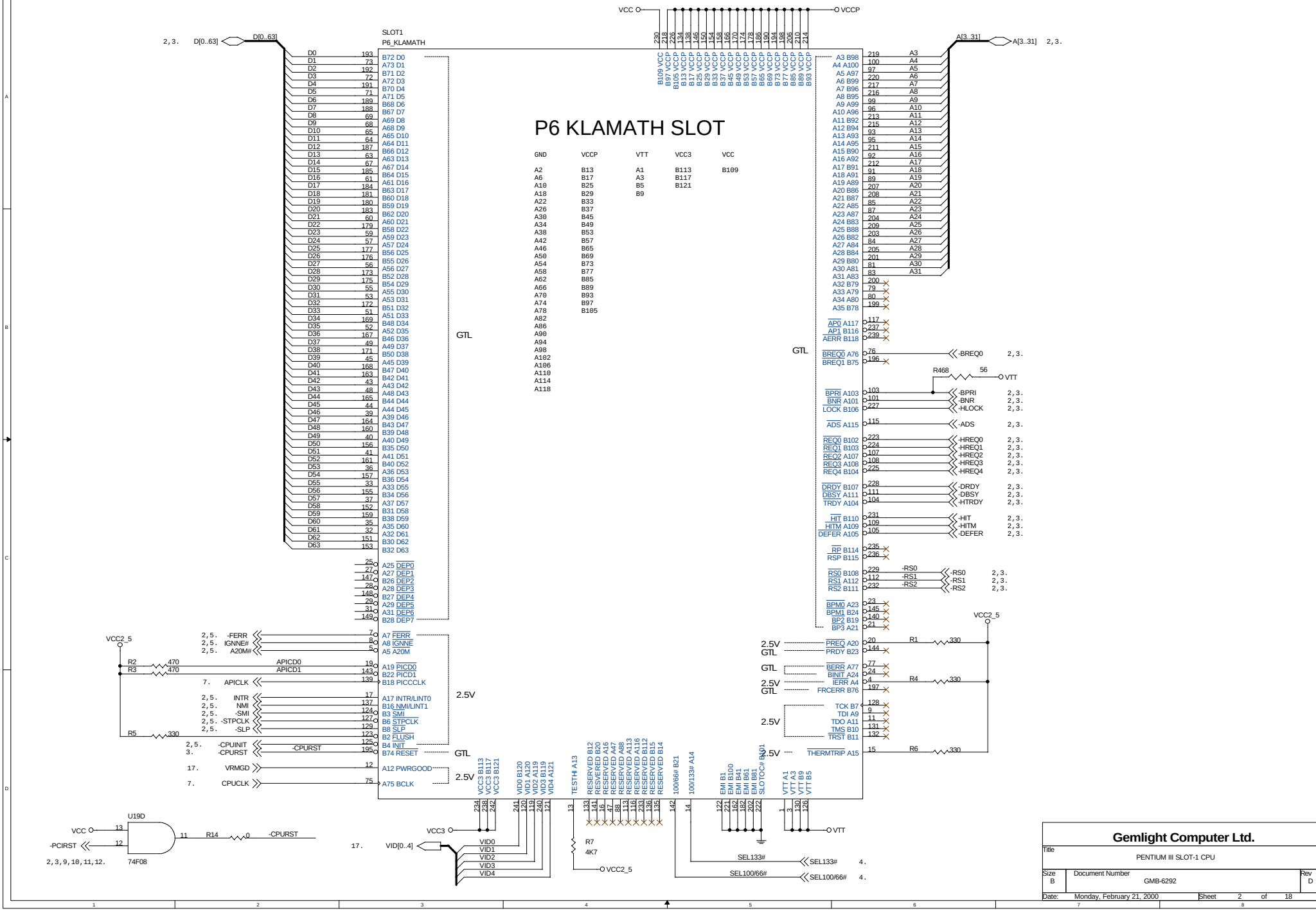

Gemlight Computer Ltd.			
Title: PENTIUM III SLOT-1 CPU			
Size: B	Document Number: GMB-6292		Rev: D
Date: Monday, February 21, 2000	Sheet 2 of 18		

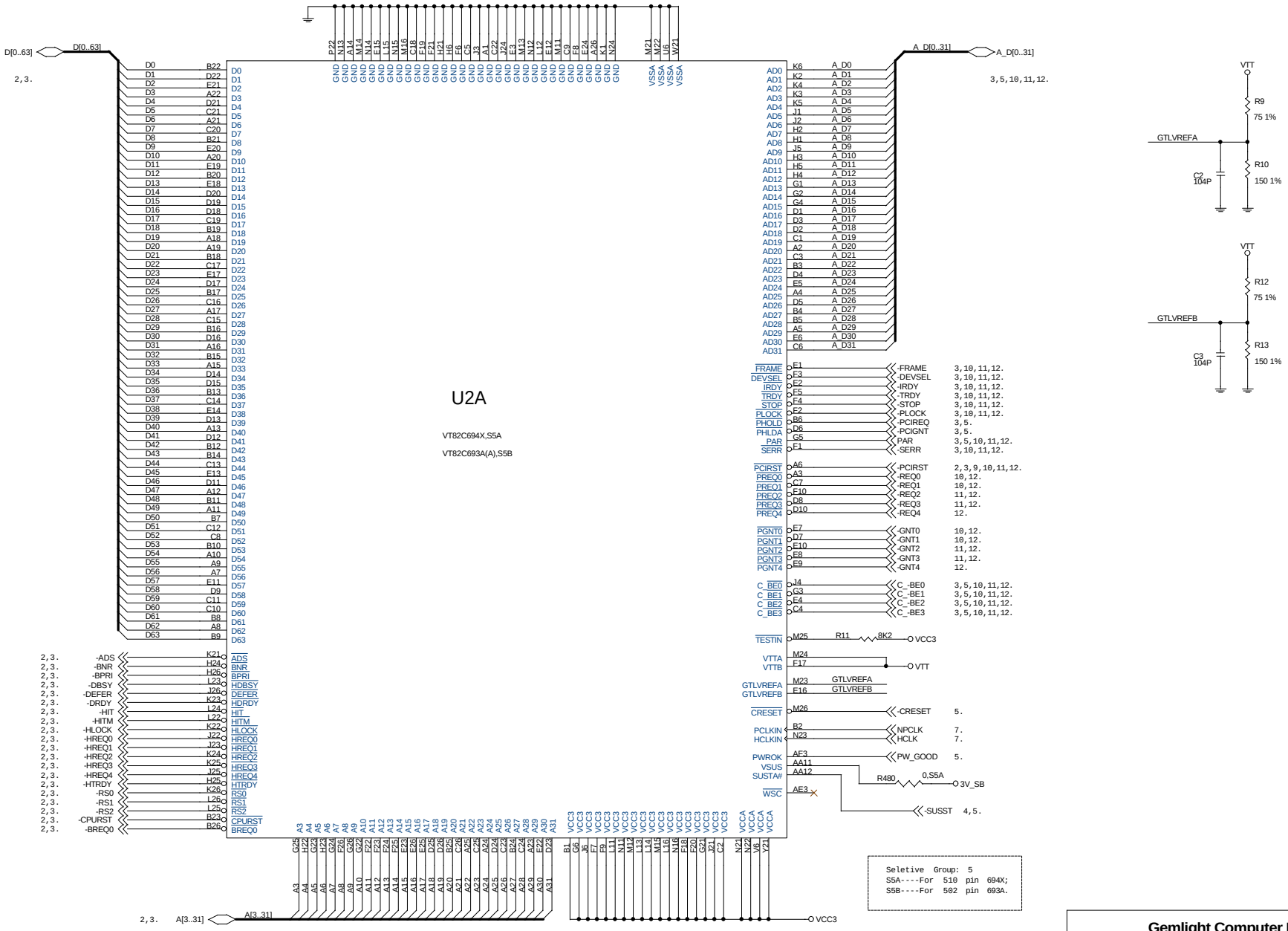

Company	Gemlight Computer Ltd.
Title	NORTH BRIDGE VT82C694-A
Size	B
Document Number	GMB-6292
Rev	D
Date	Monday, February 21, 2000
Sheet	3 of 18

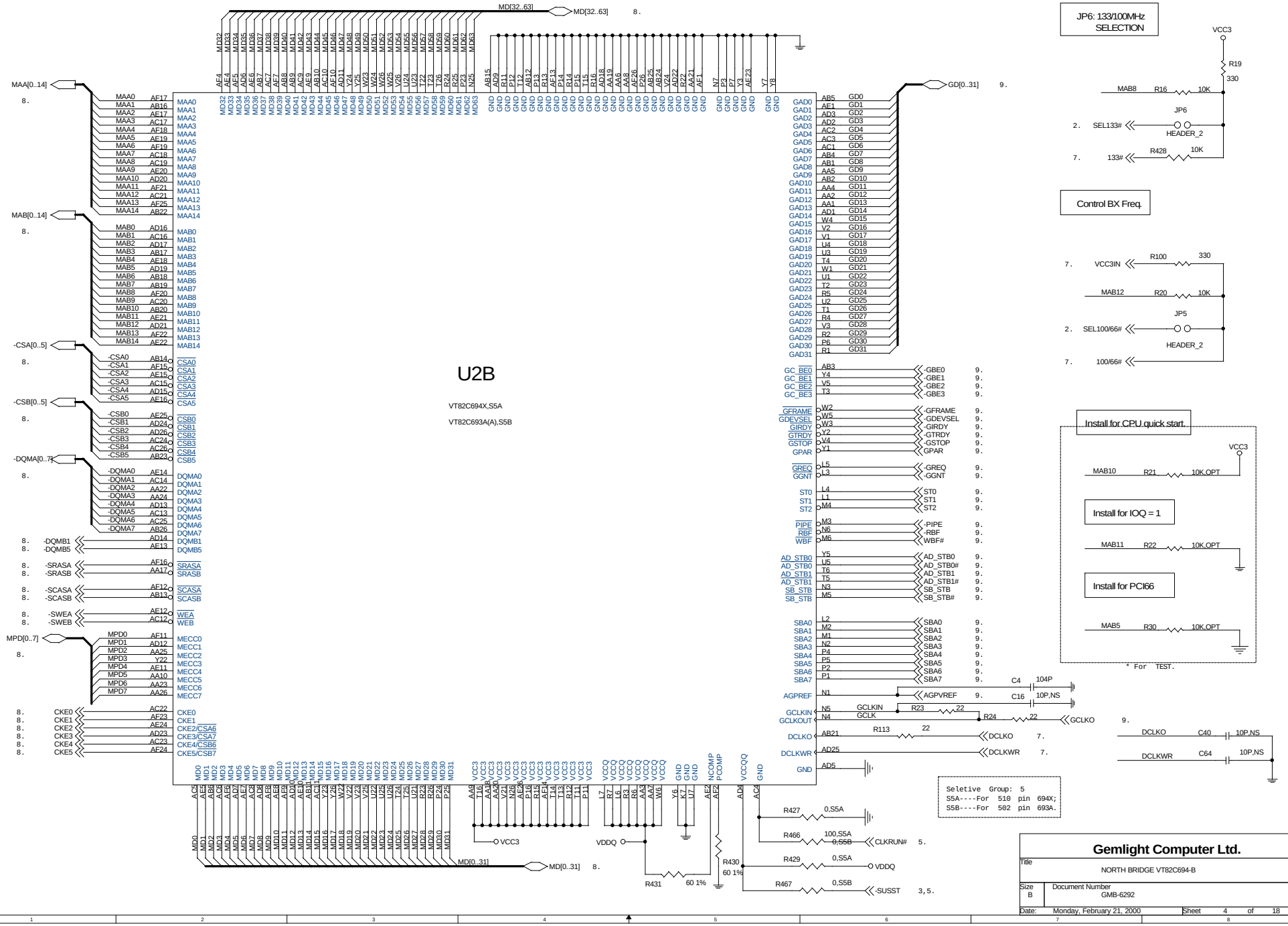
U2B
VT82C694X,S5A
VT82C693A(A),S5B
JP6: 133/100MHz SELECTION
Control BX Freq.
Install for CPU quick start.
Install for IOQ = 1
Install for PCI66
* For TEST.
Seletive Group: 5
S5A----For 510 pin 694X;
S5B----For 502 pin 693A.
Gemlight Computer Ltd.
NORTH BRIDGE VT82C694-B
GMB-6292
Monday, February 21, 2000

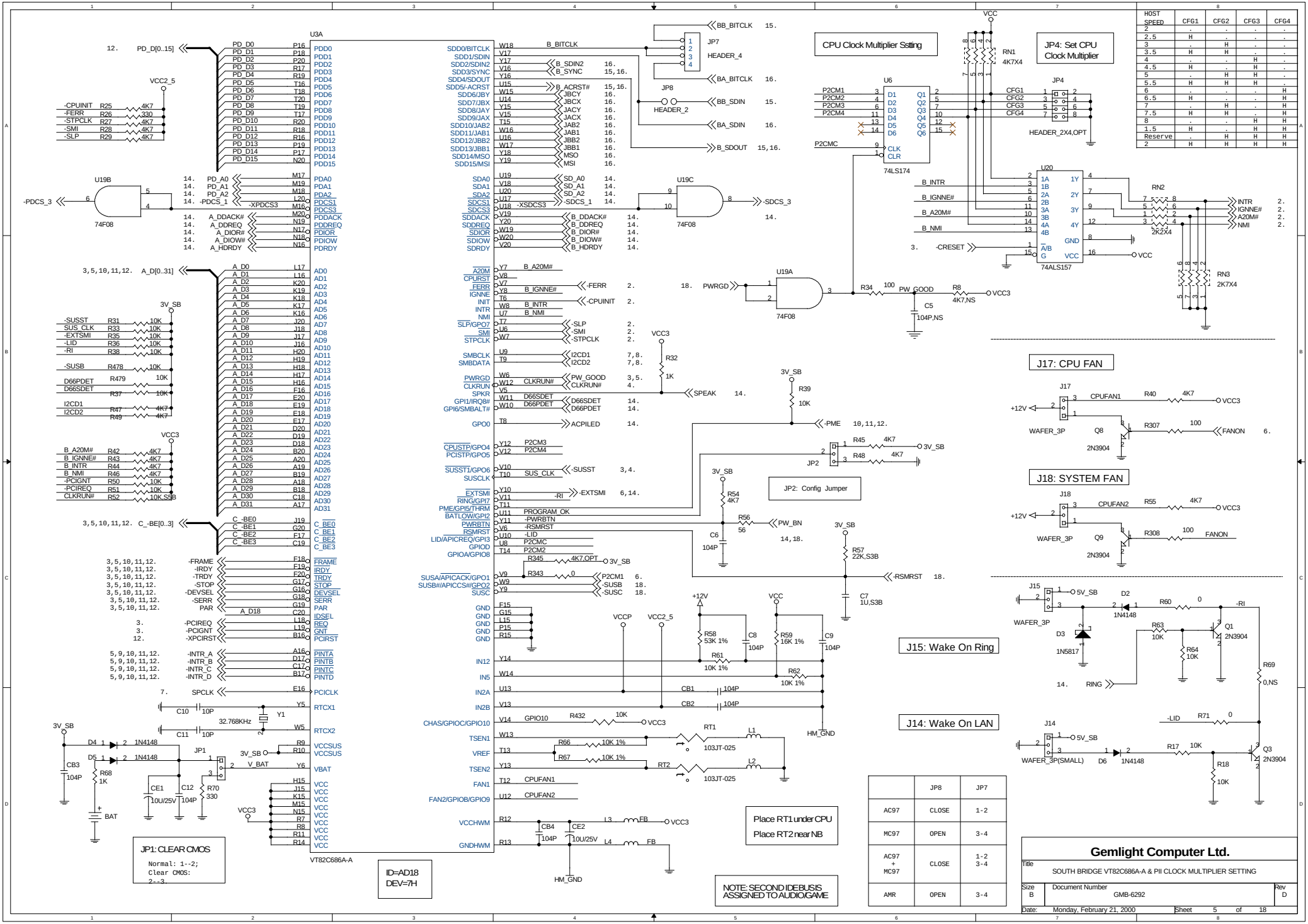
U3A
VT82C686A-A
CPU Clock Multiplier Ssting
JP4: Set CPU Clock Multiplier
HOST SPEED | CFG1 | CFG2 | CFG3 | CFG4
J17: CPU FAN
J18: SYSTEM FAN
J15: Wake On Ring
J14: Wake On LAN
JP1: CLEAR CMOS
Normal: 1--2;
Clear CMOS:
2--3.
JP2: Config Jumper
ID=AD18
DEV=7H
Place RT1 under CPU
Place RT2 near NB
NOTE: SECOND IDEBUSIS ASSIGNED TO AUDIO/GAME
JP8 | JP7
AC97 | CLOSE | 1-2
MC97 | OPEN | 3-4
AC97 + MC97 | CLOSE | 1-2 3-4
AMR | OPEN | 3-4
Gemlight Computer Ltd.
Title
SOUTH BRIDGE VT82C686A-A & PII CLOCK MULTIPLIER SETTING
Size B
Document Number GMB-6292
Rev D
Date: Monday, February 21, 2000
Sheet 5 of 18

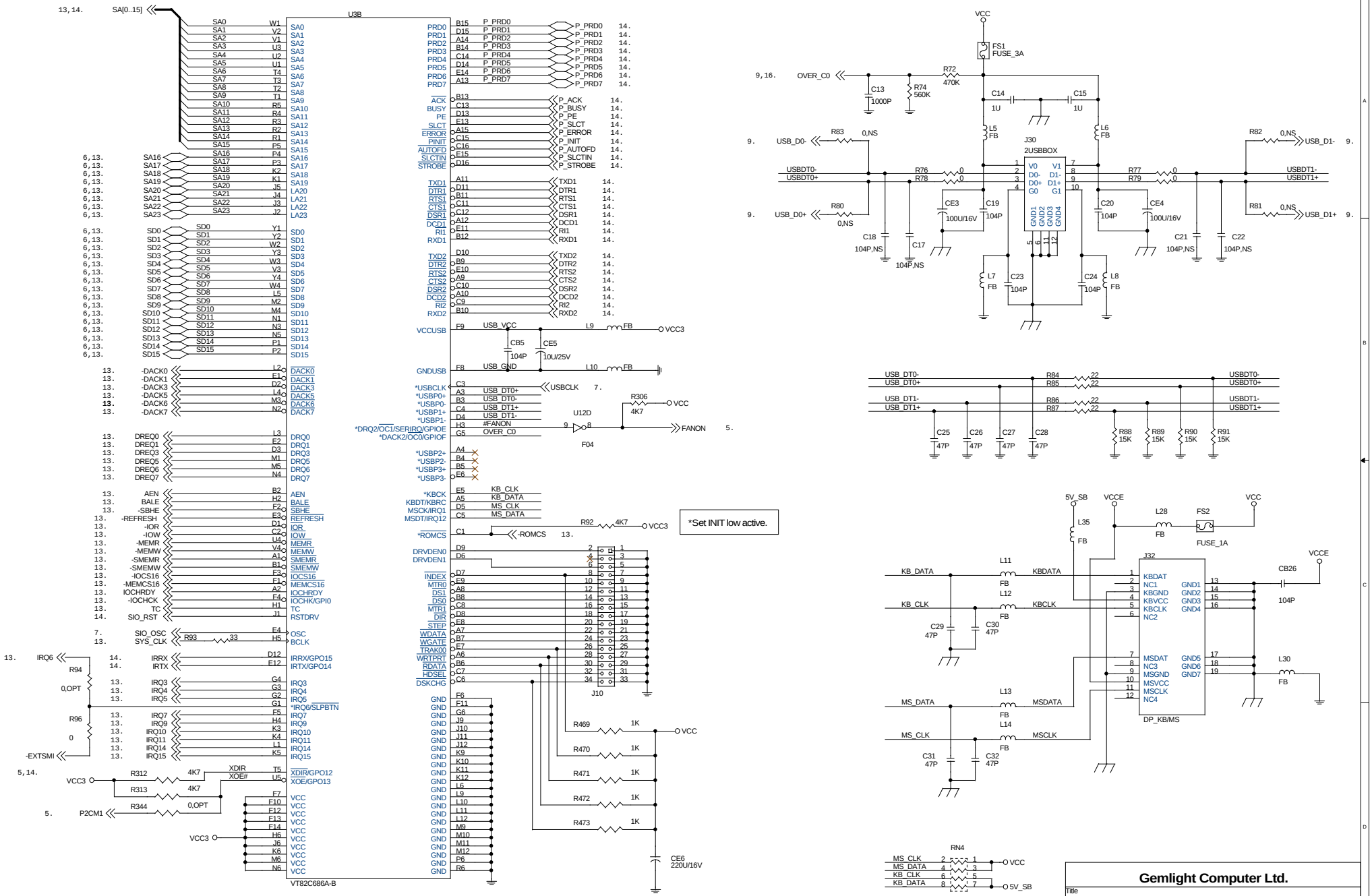
U3B
VT82C686A-B
SA[0..15]
SD[0..15]
*Set INIT low active.
Gemlight Computer Ltd.
Title
SOUTH BRIDGE VT82C686-B, USB, KB & FDD CONNECTORS
Size B
Document Number GMB-6292
Rev D
Date: Monday, February 21, 2000
Sheet 6 of 18

CLOCK GENERATOR & BUFFER

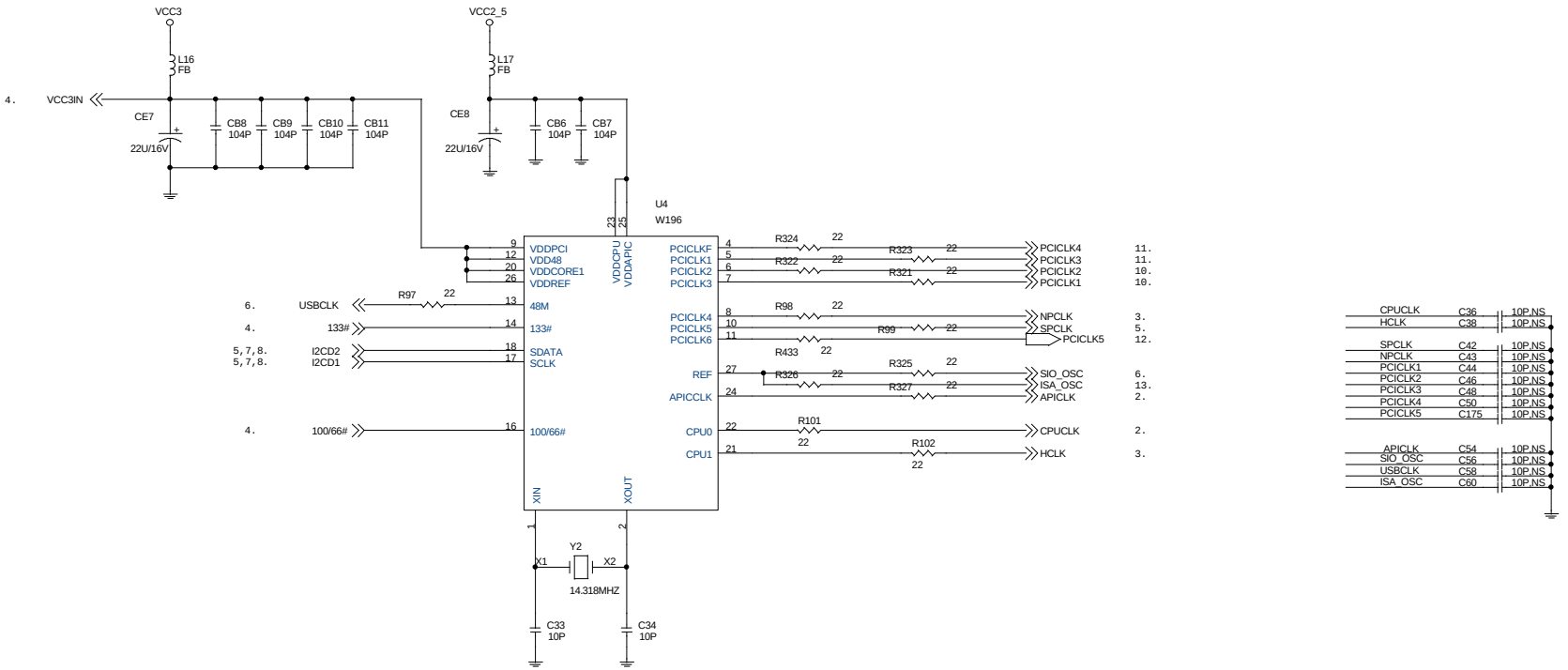

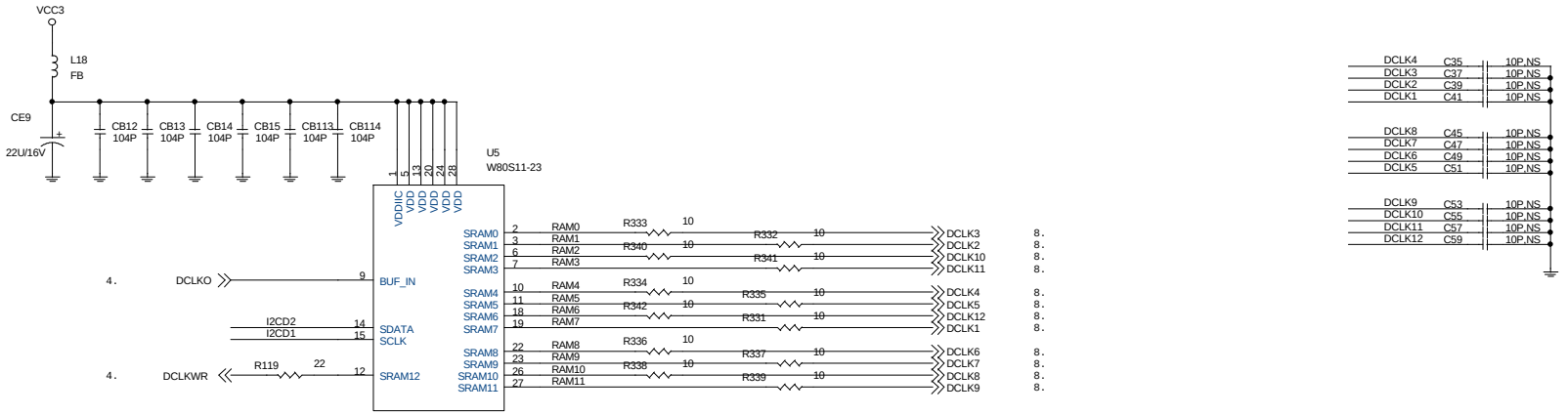

Gemlight Computer Ltd.

Title	CLOCK SYNTHESIZER	
Size B	Document Number GMB-6292	Rev D
Date: Monday, February 21, 2000	Sheet 7 of 18	

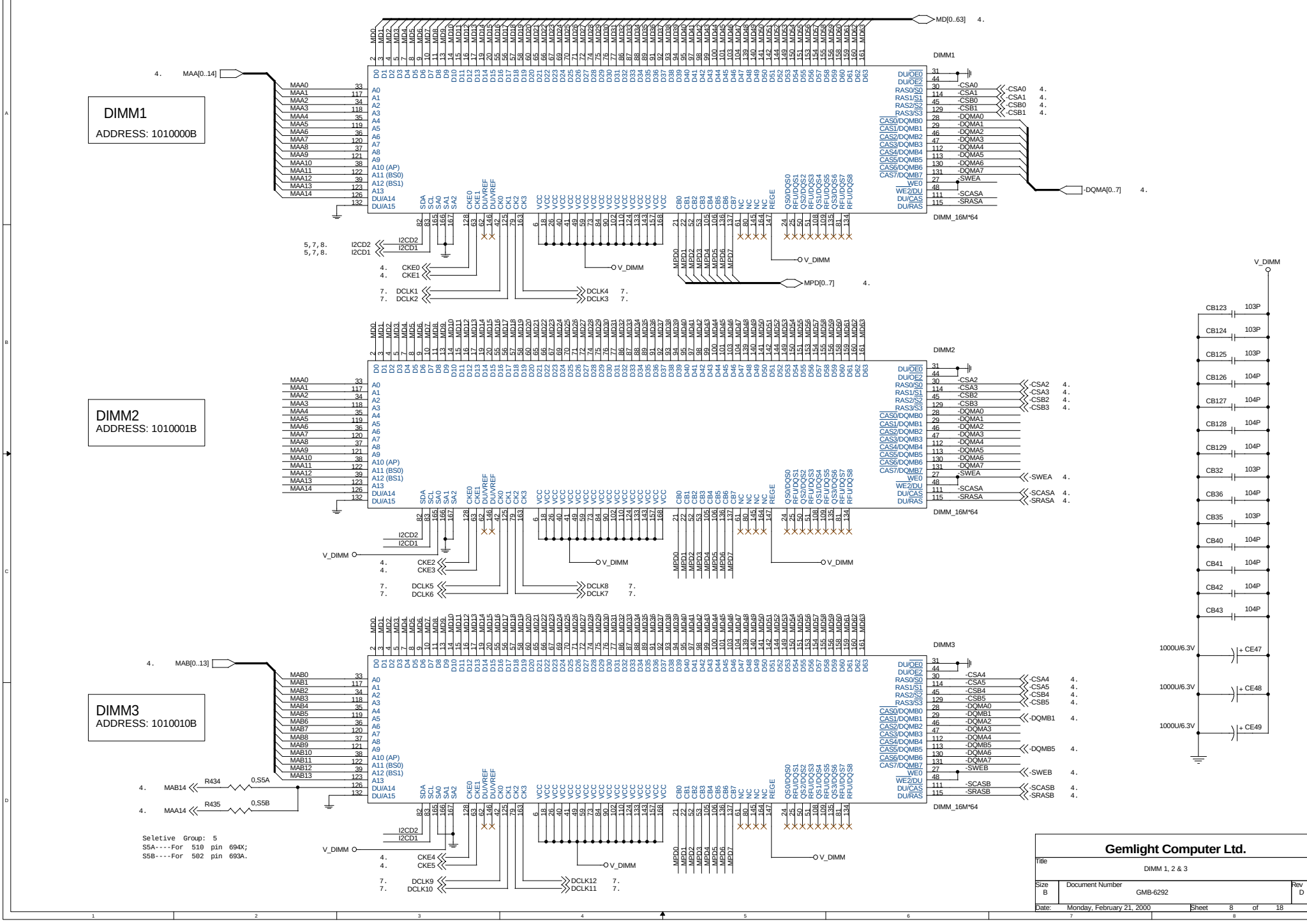

Gemlight Computer Ltd.

Title	DIMM 1, 2 & 3	
Size B	Document Number GMB-6292	Rev D
Date: Monday, February 21, 2000	Sheet 8 of 18	

AGP SLOT

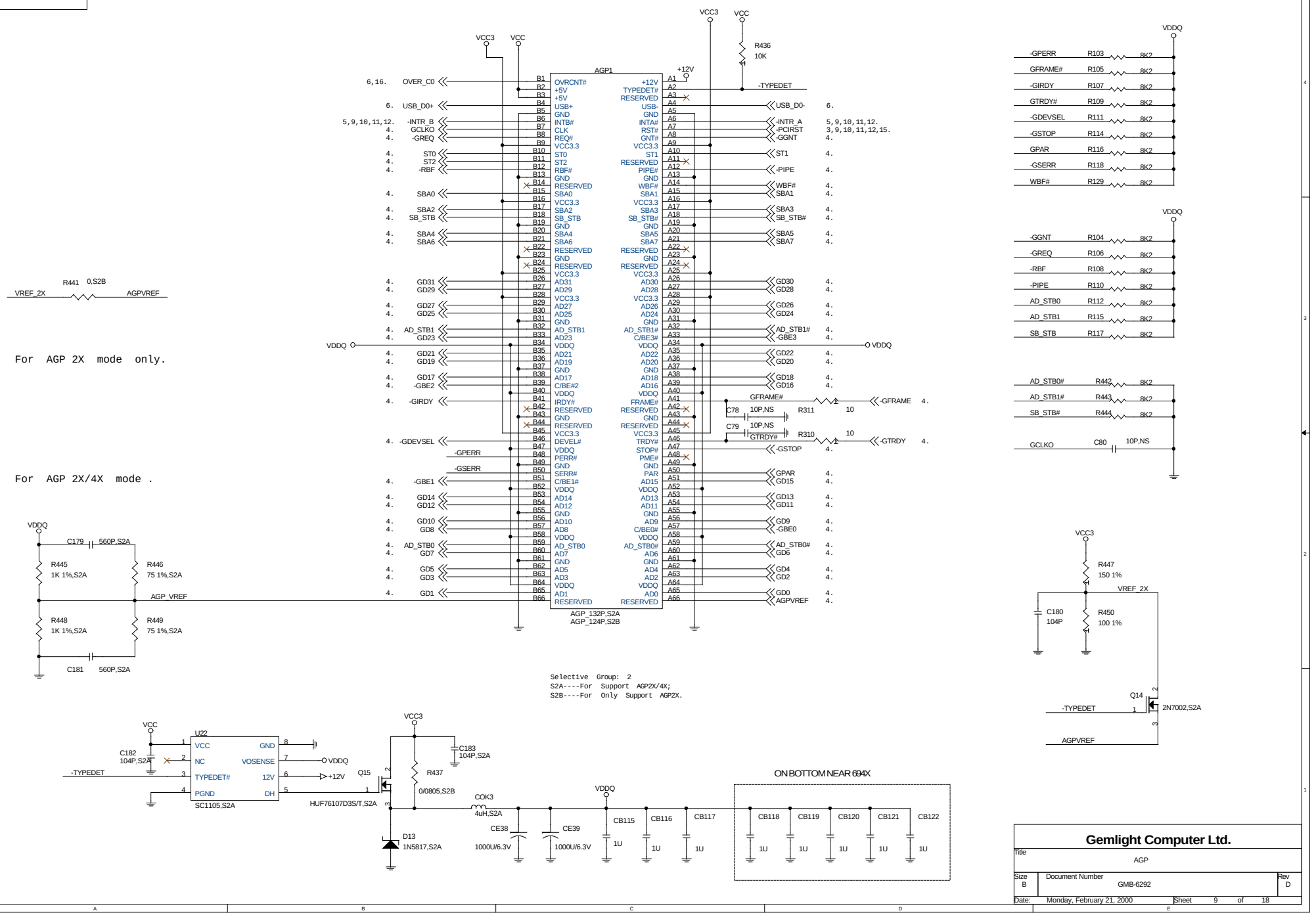

Gemlight Computer Ltd.		
Title: AGP		
Size: B	Document Number: GMB-6292	Rev: D
Date: Monday, February 21, 2000	Sheet 9 of 18	

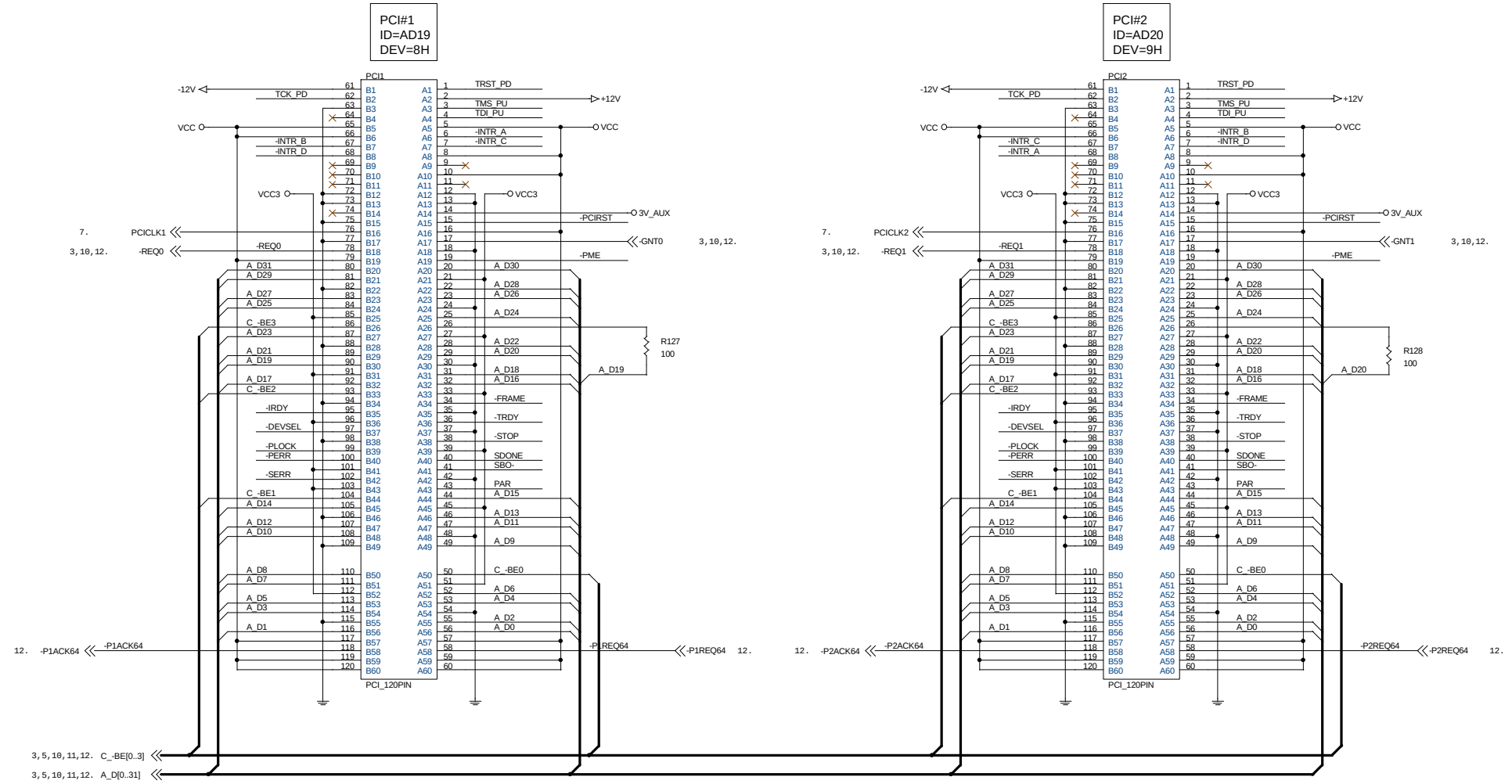

10,11,12.	TMS_PU	TMS_PU	
10,11,12.	TDI_PU	TDI_PU	
10,11,12.	TRST_PD	TRST_PD	
10,11,12.	TCK_PD	TCK_PD	
5,9,10,11,12.	-INTR_A	-INTR_A	
5,9,10,11,12.	-INTR_B	-INTR_B	
5,9,10,11,12.	-INTR_C	-INTR_C	
5,9,10,11,12.	-INTR_D	-INTR_D	

3,10,11,12.	-IRDY	-IRDY	
3,10,11,12.	-DEVSEL	-DEVSEL	
3,10,11,12.	-PLOCK	-PLOCK	
10,11,12.	-PERR	-PERR	
3,5,10,11,12.	-SERR	-SERR	

-PCIRST	-PCIRST	-PCIRST	3,9,10,11,12,15.
-PME	-PME	-PME	5,10,11,12.
-FRAME	-FRAME	-FRAME	3,10,11,12.
-TRDY	-TRDY	-TRDY	3,10,11,12.
-STOP	-STOP	-STOP	3,10,11,12.
SDONE	SDONE	SDONE	10,11,12.
SBO-	SBO-	SBO-	10,11,12.
PAR	PAR	PAR	3,5,10,11,12.

Gemlight Computer Ltd.

Title: PCI 1 & 2		
Size: B	Document Number: GMB-6292	Rev: D
Date: Monday, February 21, 2000	Sheet 10 of 18	

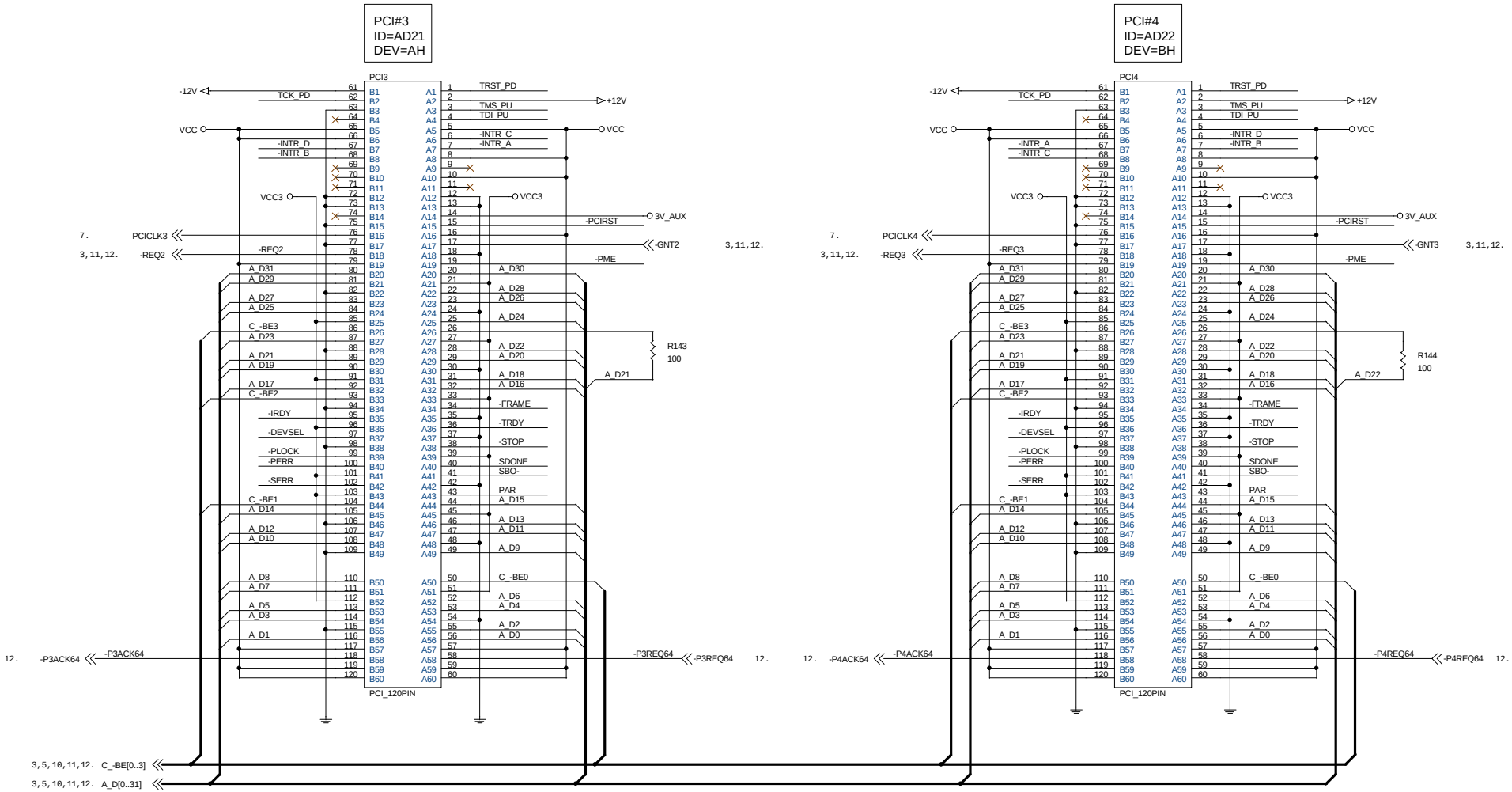

10,11,12.	TMS_PU	TMS_PU	
10,11,12.	TDI_PU	TDI_PU	
10,11,12.	TRST_PD	TRST_PD	
10,11,12.	TCK_PD	TCK_PD	
5,9,10,11,12.	-INTR_A	-INTR_A	
5,9,10,11,12.	-INTR_B	-INTR_B	
5,9,10,11,12.	-INTR_C	-INTR_C	
5,9,10,11,12.	-INTR_D	-INTR_D	

3,10,11,12.	-IRDY	-IRDY	
3,10,11,12.	-DEVSEL	-DEVSEL	
3,10,11,12.	-PLOCK	-PLOCK	
10,11,12.	-PERR	-PERR	
3,5,10,11,12.	-SERR	-SERR	

-PCIRST	-PCIRST	-PCIRST	3,9,10,11,12,15.
-PME	-PME	-PME	5,10,11,12.
-FRAME	-FRAME	-FRAME	3,10,11,12.
-TRDY	-TRDY	-TRDY	3,10,11,12.
-STOP	-STOP	-STOP	3,10,11,12.
SDONE	SDONE	SDONE	10,11,12.
SBO-	SBO-	SBO-	10,11,12.
PAR	PAR	PAR	3,5,10,11,12.

Gemlight Computer Ltd.

Title: PCI 3 & 4		
Size: B	Document Number: GMB-6292	Rev: D
Date: Monday, February 21, 2000	Sheet 11 of 18	

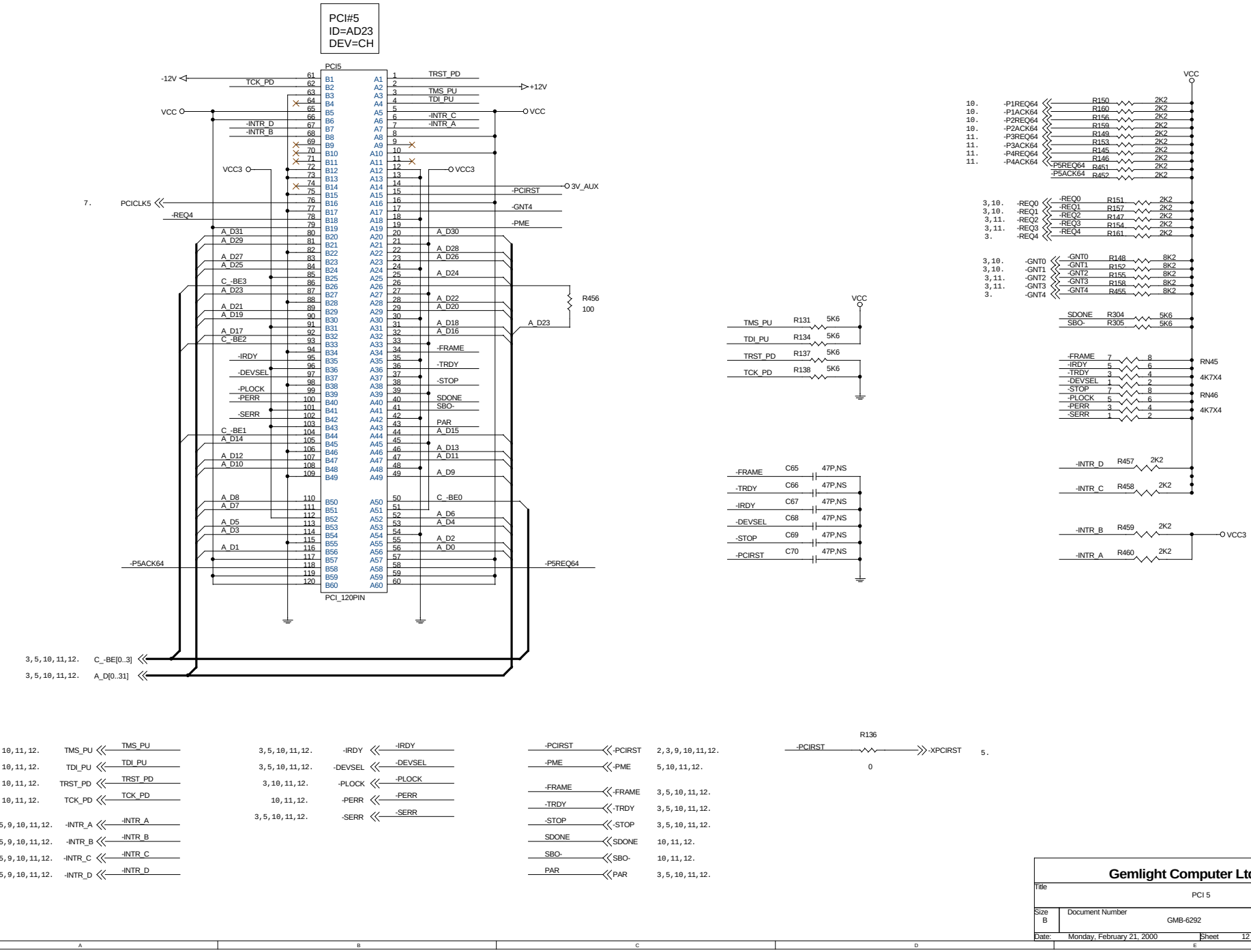

10,11,12. TMS_PU — TMS_PU
10,11,12. TDI_PU — TDI_PU
10,11,12. TRST_PD — TRST_PD
10,11,12. TCK_PD — TCK_PD

5,9,10,11,12. -INTR_A — -INTR_A
5,9,10,11,12. -INTR_B — -INTR_B
5,9,10,11,12. -INTR_C — -INTR_C
5,9,10,11,12. -INTR_D — -INTR_D

3,5,10,11,12. -IRDY — -IRDY
3,5,10,11,12. -DEVSEL — -DEVSEL
3,10,11,12. -PLOCK — -PLOCK
10,11,12. -PERR — -PERR
3,5,10,11,12. -SERR — -SERR

-PCIRST — -PCIRST — 2,3,9,10,11,12.
-PME — -PME — 5,10,11,12.
-FRAME — -FRAME — 3,5,10,11,12.
-TRDY — -TRDY — 3,5,10,11,12.
-STOP — -STOP — 3,5,10,11,12.
SDONE — SDONE — 10,11,12.
SBO- — SBO- — 10,11,12.
PAR — PAR — 3,5,10,11,12.

-PCIRST — R136 — -XPCIRST 5.

Gemlight Computer Ltd.	
Title: PCI 5	
Size: B	Document Number: GMB-6292 — Rev: D
Date: Monday, February 21, 2000	Sheet 12 of 18

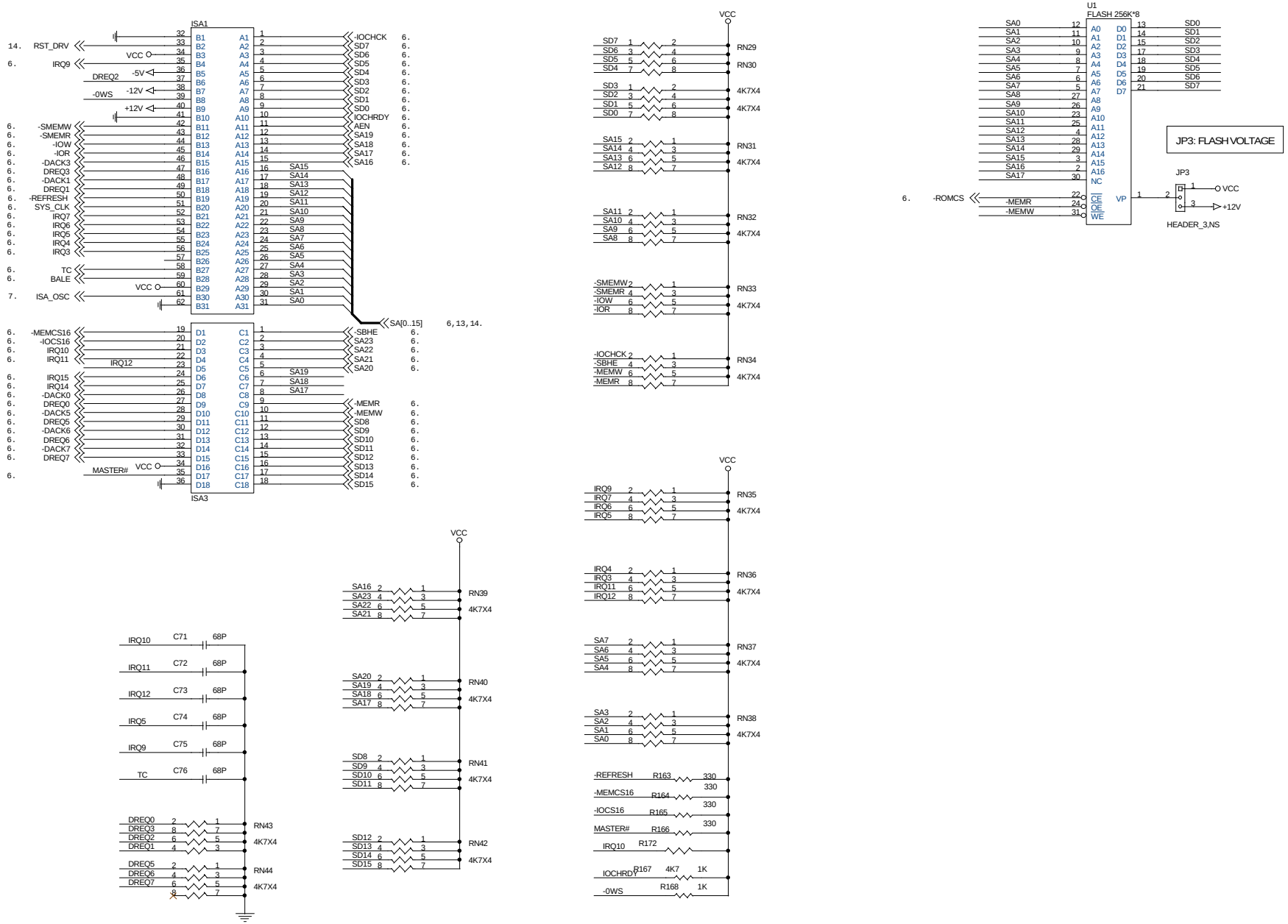

Gemlight Computer Ltd.			
Title: ISA SLOTS, BIOS & SD BUFFER			
Size: B	Document Number: GMB-6292		Rev: D
Date: Monday, February 21, 2000	Sheet 13 of 18		

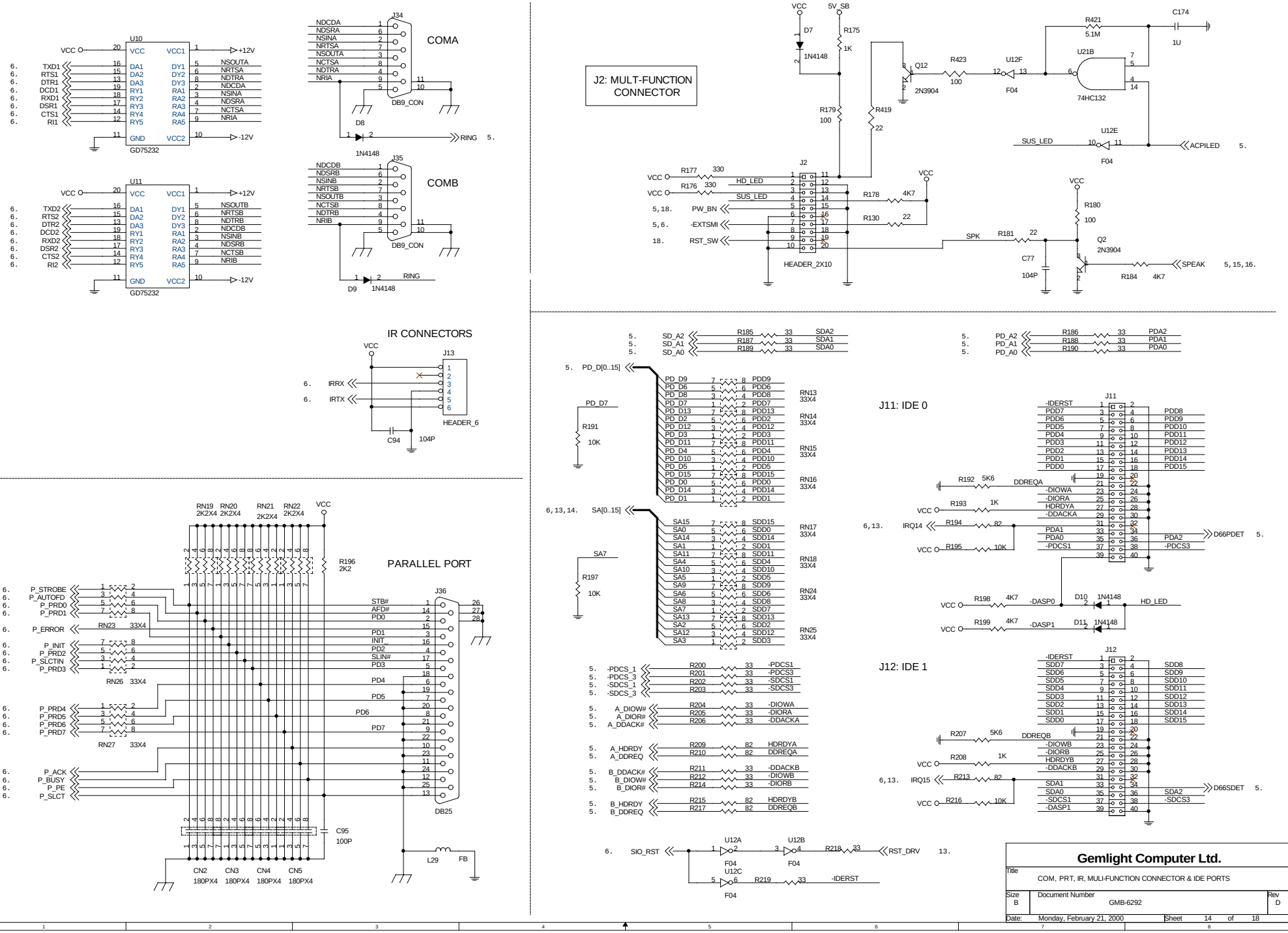

COMA
COMB
IR CONNECTORS
PARALLEL PORT
J2: MULT-FUNCTION CONNECTOR
J11: IDE 0
J12: IDE 1
U10
U11
GD75232
J34
J35
DB9_CON
J13
HEADER_6
J36
DB25
J2
HEADER_2X10
U12A
U12B
U12C
U12E
U12F
U21B
74HC132
Q12
2N3904
Q2
2N3904
J11
J12
D66PDET
D66SDET
Gemlight Computer Ltd.
Title
COM, PRT, IR, MULI-FUNCTION CONNECTOR & IDE PORTS
Size
B
Document Number
GMB-6292
Rev
D
Date: Monday, February 21, 2000
Sheet 14 of 18

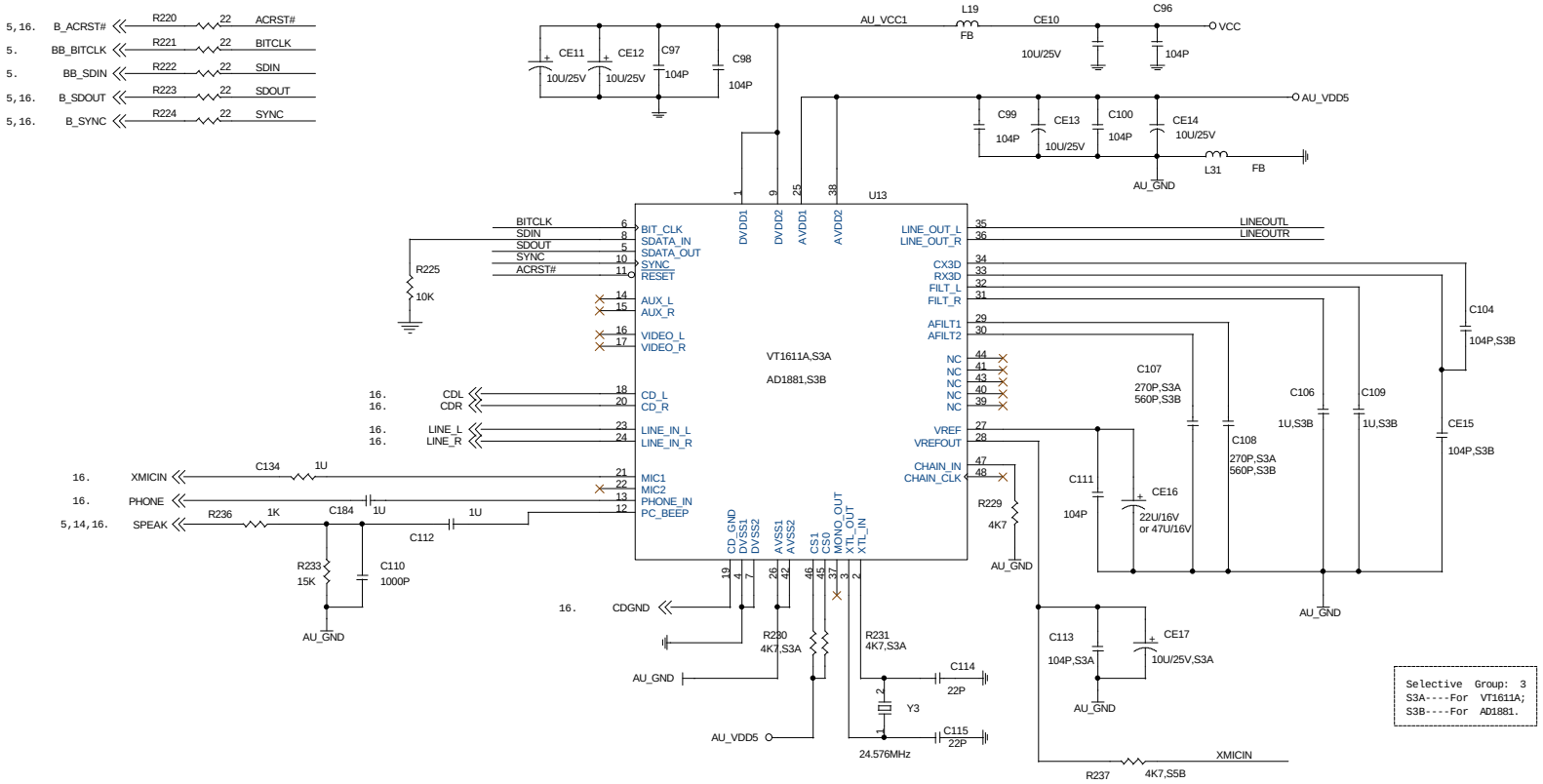

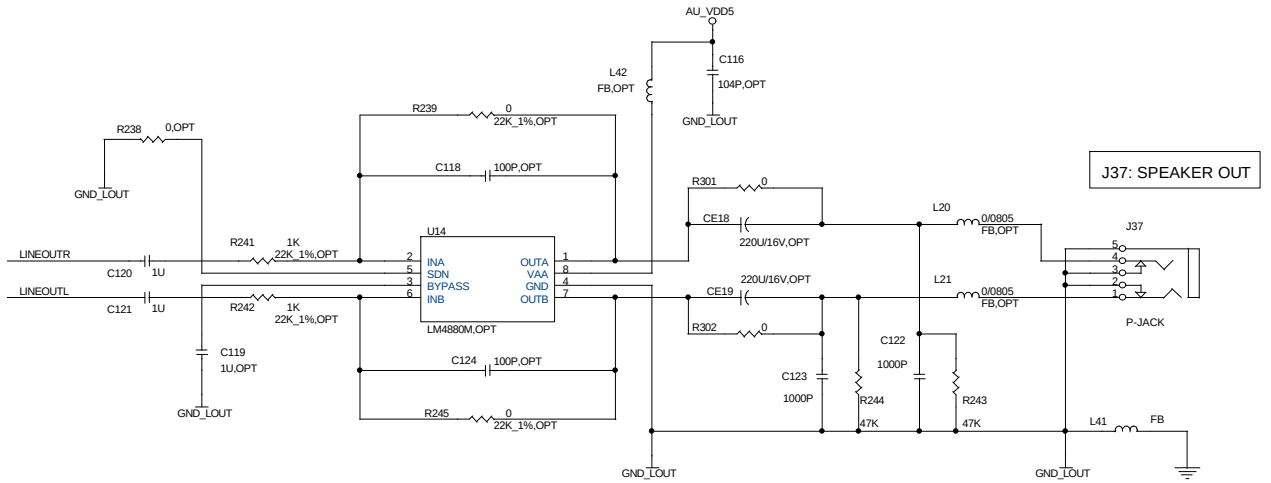

Gemlight Computer Ltd.			
Title: AUDIO PORT			
Size: B	Document Number: GMB-6292		Rev: D
Date: Monday, February 21, 2000	Sheet 15 of 18		

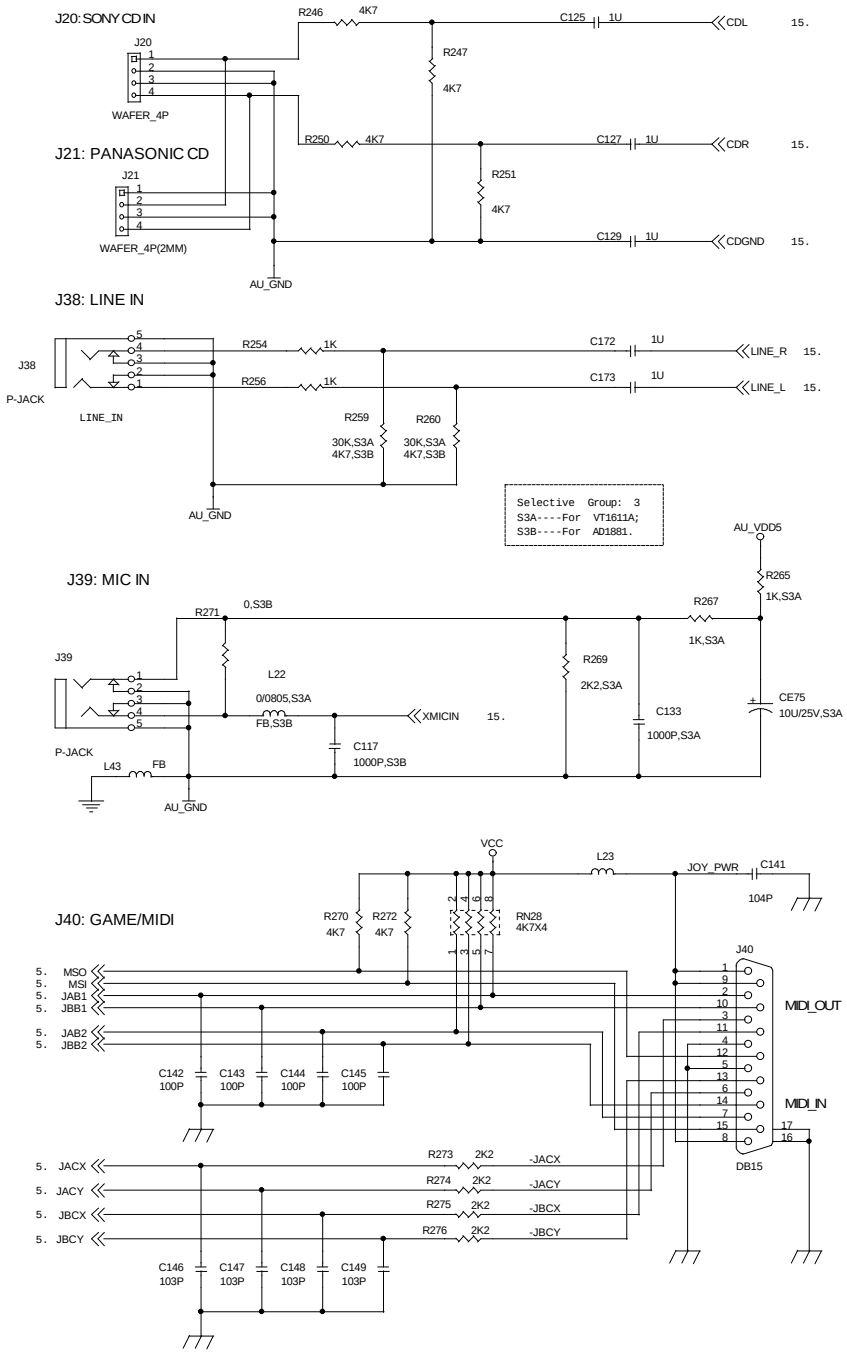

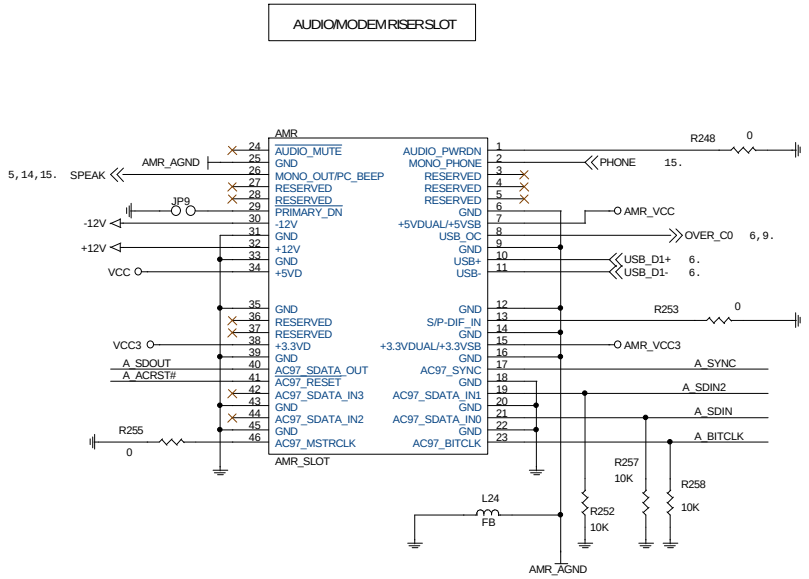

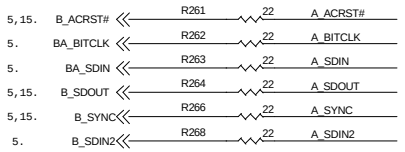

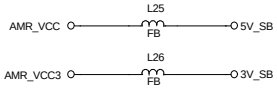

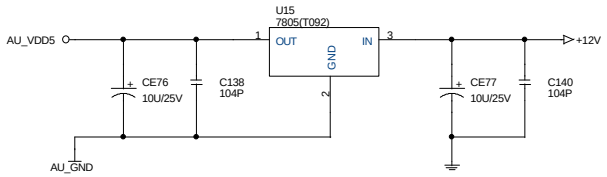

Gemlight Computer Ltd.

Title	AUDIO IN & GAME PORT	
Size B	Document Number GMB-6292	Rev D
Date: Monday, February 21, 2000	Sheet 16 of 18	

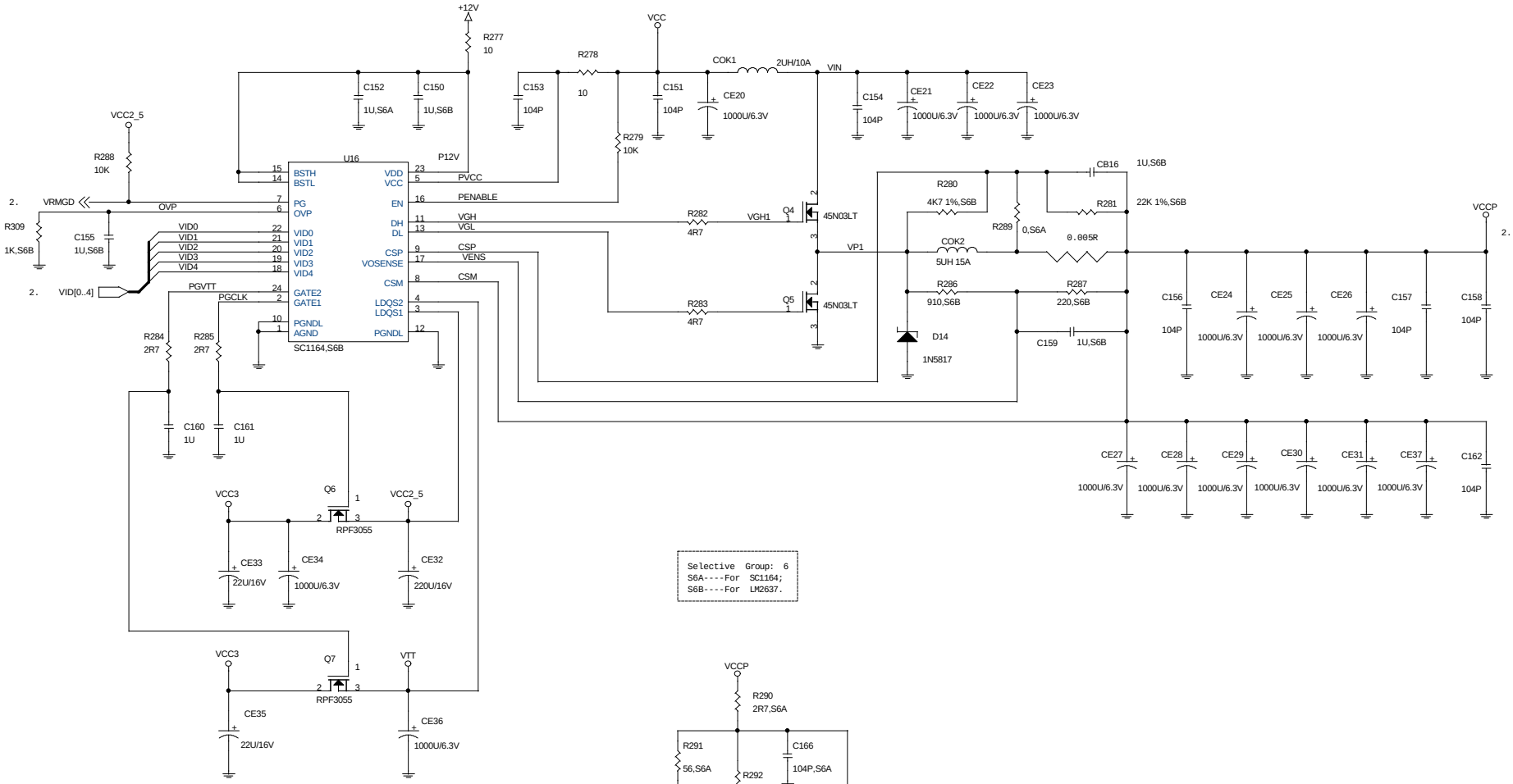

VID4	VID3	VID2	VID1	VID0	Vcore
0	1	0	0	1	1.60
0	1	0	0	0	1.65
0	0	1	1	1	1.70
0	0	1	1	0	1.75
0	0	1	0	1	1.80
0	0	1	0	0	1.85
0	0	0	1	1	1.90
0	0	0	1	0	1.95
0	0	0	0	1	2.00
0	0	0	0	0	2.05
1	1	1	1	1	2.00
1	1	1	1	0	2.10
1	1	1	0	1	2.20
1	1	1	0	0	2.30
1	1	0	1	1	2.40
1	1	0	1	0	2.50
1	1	0	0	1	2.60
1	1	0	0	0	2.70
1	0	1	1	1	2.80

Gemlight Computer Ltd.

Title	DC to DC CONVERTER CIRCUITS	
Size B	Document Number GMB-6292	Rev D
Date: Monday, February 21, 2000	Sheet 17 of 18	

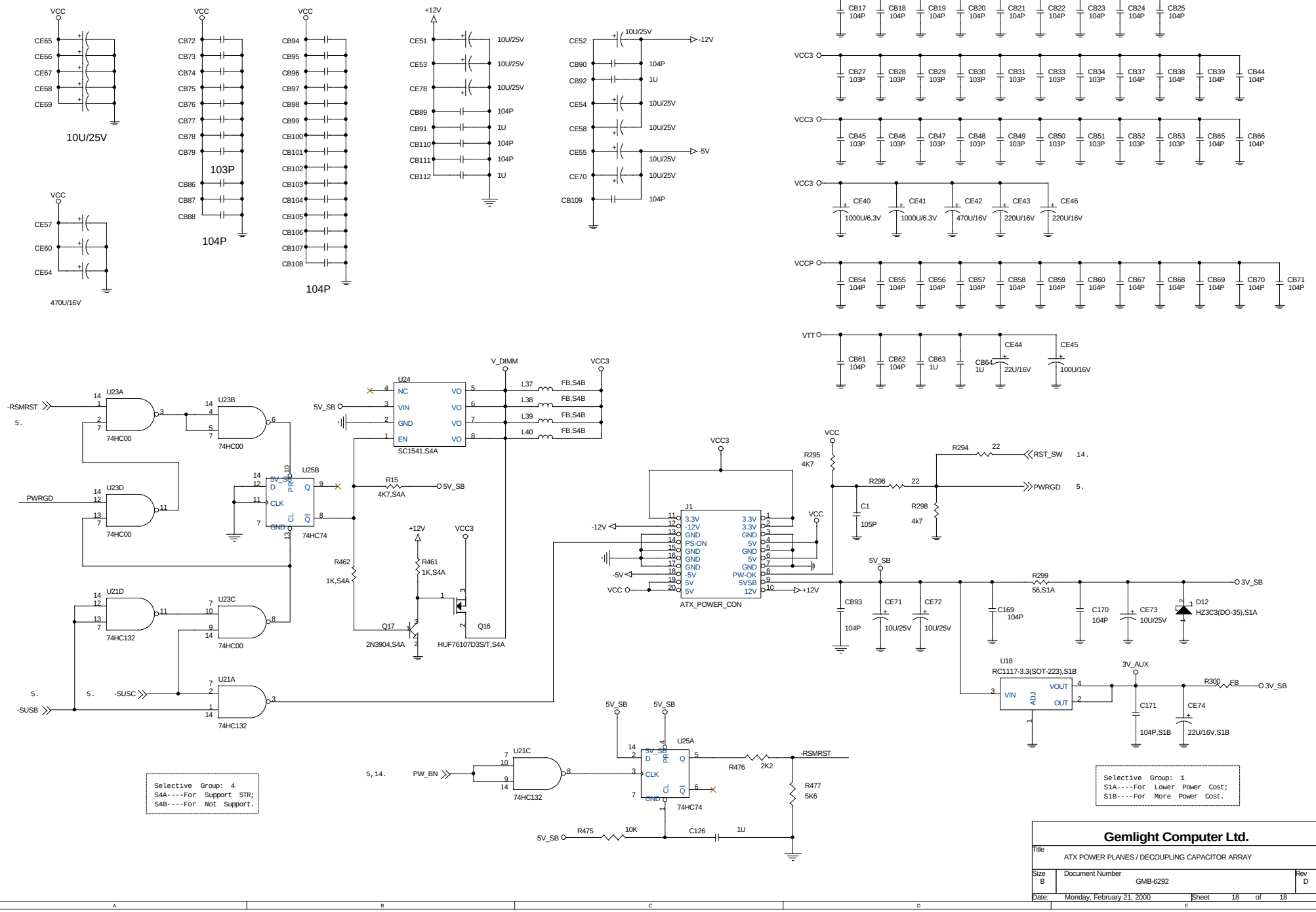

Gemlight Computer Ltd.

Title	ATX POWER PLANES / DECOUPLING CAPACITOR ARRAY	
Size B	Document Number GMB-6292	Rev D
Date: Monday, February 21, 2000	Sheet 18 of 18	