ADM8513

USB1.1 to Ethernet LAN Controller

The ADM8513 provides a USB1.1 interface to connect to a PC or embedded system at a 12Mbps data transfer rate through an innovative "hot plug & play" function. Providing greater connectivity for a range of devices including desktop, notebook, handheld PC, web-PDA, Pocket PC and computer peripherals, the ADM8513 is the ideal connection solution for both Ethernet and home networks.

The ADM8513 also provides a serial interface for storing default values, such as vendor IDs and Product IDs, in the EEPROM using the EEPROM Access Program (EAP). The mass production time at the system board level is vastly reduced due to an innovative manufacturing test program (MFG), which is available for mass production.

Infineon fully supports the ADM8513 with NDIS 5, Linux and WinCE drivers, an EEPROM burn-in program and an MFG program. while the WinCE driver is adopted by embedded systems such as handheld PCs, Web PDAs and Pocket PCs.

Applications

- Handheld PCs, PDAs & Pocket PCs
- Desktops & Notebooks
- Computer Periperals

Features

- Full-Speed USB 1.0 and 1.1 compliant
- Supports USB1.1 configuration and one interface
- Supports all USB standards and 2 vendor specific commands
- Supports 4 endpoints
- IEEE802.3 10BASE-T and IEEE802.3u 100BASE-TX compliant
- Supports IEEE 802.3x flow control
- Provides full-duplex operation in both 10Mbps and 100Mbps Ethernet modes
- IEEE802.3u Auto-Negotiation (NWAY) support for full/half duplex 10BASE-T and 100BASE-TX
- Supports Wake-on-LAN and remote wake-up (AMD Magic Packet, Link Change, and Microsoft Wake-up frame)
- Digital Decision Feedback Equalizer and Integrated Baseline Wander Correction
- Provides a serial interface for 93C46 EEPROM Read/Write functions
- Automatically loads device ID and vendor ID from the EEPROM after power-on is reset
- Provides 2 kinds of LED displays
- NDIS 5.0, Linux and WinCE drivers
- EEPROM Burn-in and MFG programs
- Supports 6 GPIO pins

Physical Characteristics

- CSM CMOS, 0.25um
- 48-pin LQFP package
- 3.3V power supply with 5V/3.3V I/O tolerance

ADM8513 Block Diagram

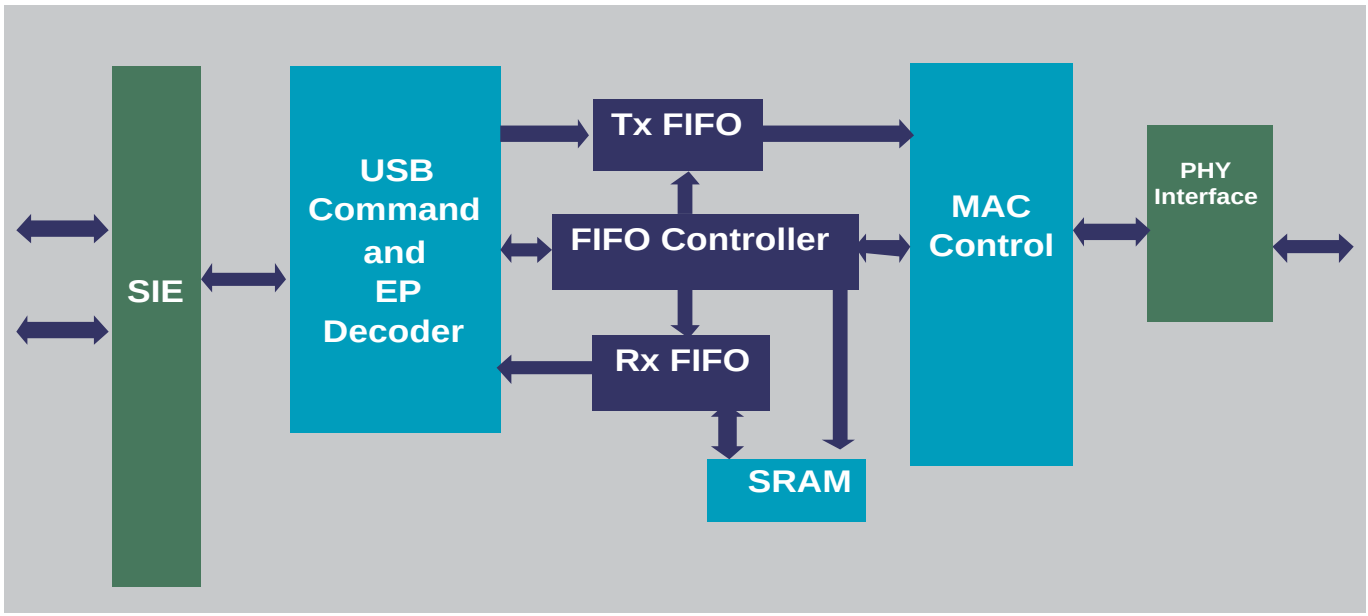

Product Summary

ADM8513 IC

Product	Sales Code	Description	Package
ADM8513	ADM8513	USB to Ethernet Controller	LQFP-48

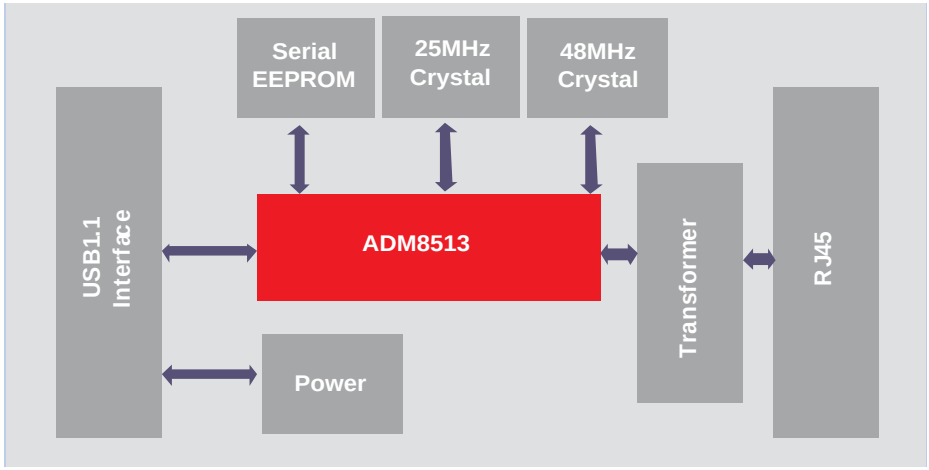

ADM8513 USB to Ethernet Converter Application Example

How to reach us:
http://www.infineon.com

Published by
Infineon Technologies AG,
St.-Martin-Strasse 53,
81669 München

© Infineon Technologies AG 2004.
All Rights Reserved.

Template: pb_tmplt_wide.fm/4
yb_rev_1

Attention please!

The information herein is given to describe certain components and shall not be considered as a guarantee of characteristics.

Terms of delivery and rights to technical change reserved.

We hereby disclaim any and all warranties, including but not limited to warranties of non-infringement, regarding circuits, descriptions and charts stated herein.

Information

For further information on technology, delivery terms and conditions and prices please contact your nearest Infineon Technologies Office.

Warnings

Due to technical requirements components may contain dangerous substances. For information on the types in question please contact your nearest Infineon Technologies Office.

Infineon Technologies Components may only be used in life-support devices or systems with the express written approval of Infineon Technologies, if a failure of such components can reasonably be expected to cause the failure of that life-support device or system, or to affect the safety or effectiveness of that device or system. Life support devices or systems are intended to be implanted in the human body, or to support and/or maintain and sustain and/or protect human life. If they fail, it is reasonable to assume that the health of the user or other persons may be endangered.

Ordering No. B000-H0000-X-X-7600
Printed in Germany
PS 04043. NB

Published by Infineon Technologies AG